CITY OF CASA GRANDE
DOWNTOWN STREETS RECONSTRUCTION PLANS
PHASE I

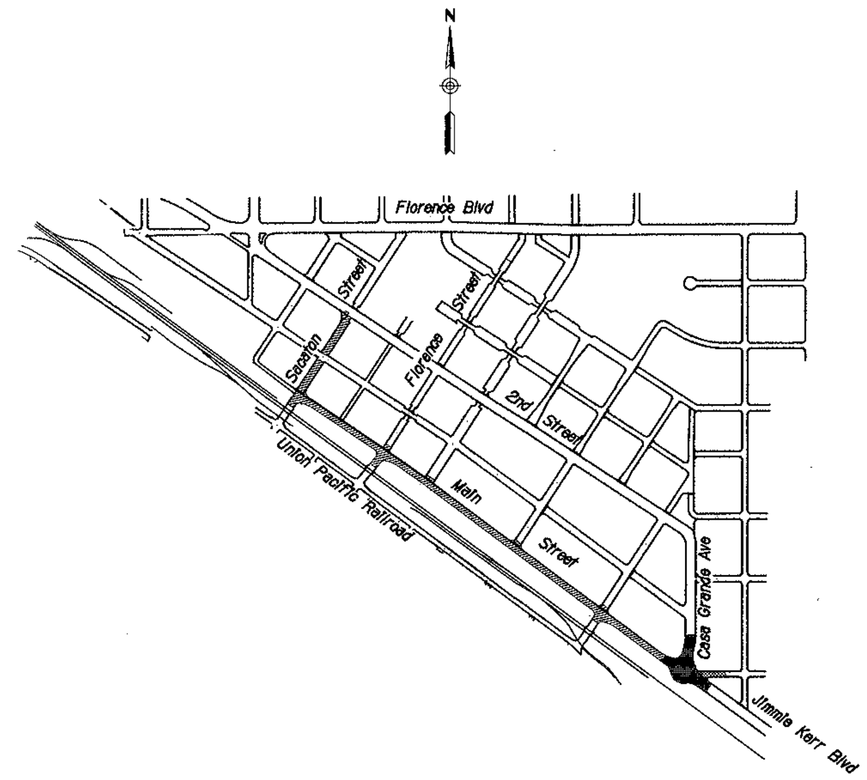

CITY OF CASA GRANDE
510 EAST FLORENCE BLVD
CASA GRANDE, ARIZONA 85222

MAYOR

CHARLES T. WALTON, Sr.

MAYOR PRO TEM

RALPH VARELA

COUNCIL MEMBERS

STEPHEN Q. MILLER
JAMES NORRIS
KARL PETERSON
DICK POWELL
ALBERT A. GUGENBERGER

CITY MANAGER

JAMES THOMPSON

PUBLIC WORKS DIRECTOR

KEVIN LOUIS

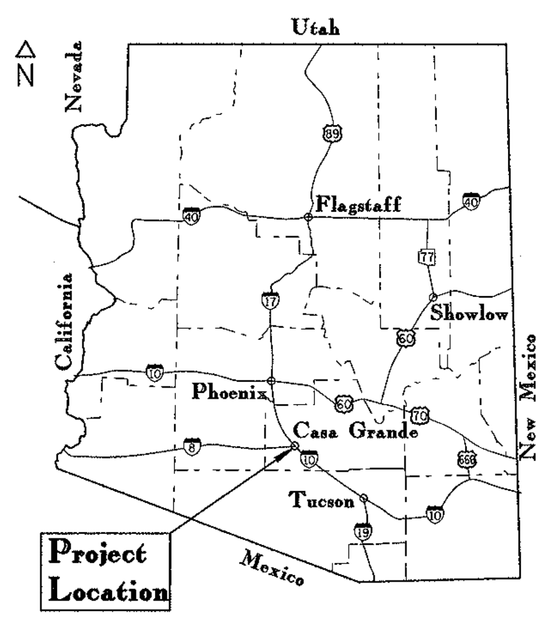

Approved: Paul McClellan 2/5/2007
PAUL McCLELLAN, PE — Date
Senior Civil Engineer

Approved: 2-5-07
KEVIN LOUIS — Date
Public Works Director

DMJM HARRIS | AECOM

T:\98064\19\dwgs\data phase1\casacvr_ph1.dgn
2/5/2007

ABBREVIATIONS

AASHTO.....	American Association of State Highway and Transportation Officials
AB.....	Aggregate Base
AC.....	Asphaltic Concrete
ACFC.....	Asphalt Concrete Friction Course
ACI.....	American Concrete Institute
ACP.....	Asbestos Cement Pipe
ACSC.....	Asphalt Concrete Surface Course
ADOT.....	Arizona Department of Transportation
Ahd.....	Ahead
AISC.....	American Institute of Steel Construction
APS.....	Arizona Public Service Company
AR.....	Axis of Rotation
Asph.....	Asphalt
ASTM.....	American Society for Testing Materials
AWS.....	American Welding Society
B/C.....	Back of Curb
BC.....	Brass Cap
BCR.....	Begin Curb Return
BCT.....	Breakaway Cable Terminal
Bdy.....	Boundary
Bev.....	Beveled)
BFS.....	Begin Full Super
Bit.....	Bituminous
Bk.....	Back
Bkfl.....	Backfill
BLM.....	Bureau of Land Management
BM.....	Bench Mark
Br.....	Bridge
C&G.....	Curb and Gutter
CAP.....	Corrugated Aluminum Pipe
CAPA.....	Corrugated Aluminum Pipe Arch
CB.....	Catch Basin
CBC.....	Concrete Box Culvert
CG.....	Cattle Guard
CIP.....	Cast Iron Pipe
CIPP.....	Cast-In-Place Pipe
Cl.....	Clear(ance)
CLD.....	Concrete Lined Ditch
CMP.....	Corrugated Metal Pipe
CO.....	Clean Out
Conc.....	Concrete
Conn.....	Connection
Cont.....	Continuous
Cor.....	Corner
Corr.....	Correction (VPI to VC)
Cr.....	Crown
CSP.....	Corrugated Steel Pipe
CSPA.....	Corrugated Steel Pipe Arch
CTB.....	Concrete Treated Base
D.....	Degree of Curve
DA.....	Drainage Area
DC.....	Depressed Curb
DE.....	Drainage Easement
Def.....	Deflection
Det.....	Detail
DIP.....	Ductile Iron Pipe
Drn.....	Drain(age)
D/W.....	Driveway
Dwg.....	Drawing
E.....	Electricity)
e.....	External
ECR.....	End Curb Return
EFS.....	End Full Super
El.....	Elevation
Emb.....	Embankment
EP.....	Edge of Pavement
Esmt.....	Easement
Exc.....	Excavation
Exist.....	Existing)
Exp Jt.....	Expansion Joint
F/C.....	Face of Curb
FCDMC.....	Flood Control District of Maricopa County
FF.....	Finished Floor (Elevation)
FH.....	Fire Hydrant
Fnd.....	Found
Frwy.....	Freeway
G.....	Gutter (Flowline Elevation)
ga.....	Gauge
GB.....	Grade Break
GM.....	Gas Meter
Gnd.....	Ground
GP.....	Guy Pole
Gr.....	Grade
GR.....	Guardrail
GV.....	Gas Valve
HDPE.....	High Density Polyethylene
Hdwl.....	Headwall
HH.....	Hand Hole
HW.....	High Water
ID.....	Inside Diameter
Inv.....	Invert
Irr.....	Irrigation
L.....	Length of Curve
LG.....	Lip of Gutter
LC.....	Long Chord
LS.....	Lump Sum
Lt.....	Left
m^2.....	Square Meters
m^3.....	Cubic Meters
MAG.....	Maricopa Association of Governments
mgal.....	1000 Gallons
Matl.....	Material
MCDOT.....	Maricopa County Department of Transportation
MH.....	Manhole
Min.....	Minimum
Mod.....	Modify
Mon.....	Monument
NC.....	Normal Crown
NPI.....	Non-pay Item
NPDES.....	National Pollutant Discharge Elimination System
NTS.....	Not to Scale
OC.....	On Center
OD.....	Outside Diameter
P.....	Pavement (Surface Elevation)
Ped.....	Pedestal
PC.....	Point of Curvature
PCC.....	Point of Compound Curvature
PCC.....	Portland Cement Concrete
PGL.....	Profile Grade Line
PI.....	Point of Intersection
POB.....	Point of Begining
POC.....	Point on Curve
POE.....	Point on End
POT.....	Point on Tangent
PP.....	Power Pole
PRC.....	Point of Reverse Curvature
Prel.....	Preliminary
Proj.....	Project
Prop.....	Proposed
PRVC.....	Point of Reverse Vertical Curvature
PT.....	Point of Tangency
PVC.....	Point of Vertical Curvature
PVC.....	Poly Vinyl Chloride
PVI.....	Point of Vertical Intersection
Pvmt.....	Pavement
PVT.....	Point of Vertical Tangency
Q.....	Quantity of Drainage Runoff
Qtr.....	Quarter
R.....	Radius
R.....	Range
RCP.....	Reinforced Concrete Pipe
Rdwy.....	Roadway
Rebar.....	Reinforcing Bar
Reinf.....	Reinforcedling)
Reloc.....	Relocate
Rem.....	Remove
Ret.....	Retainting)
RGRCP.....	Rubber Gasket Reinforced Concrete Pipe
RR.....	Railroad
Rt.....	Right
R/W.....	Right of Way
S.....	Slope
Sch.....	Schedule
SCS.....	Soil Conservation Service
SD.....	Storm Drain
SE.....	Slope Easement
Sec.....	Section
SG.....	Subgrade
Shldr.....	Shoulder
Shr.....	Shrinkage
Sht.....	Sheet
Sk.....	Skew
SM.....	Select Material
Specs.....	Specifications (See Note 1)
SRP.....	Salt River Project
SS.....	Sanitary Sewer
Sta.....	Station
Struc.....	Structural
Subdiv.....	Subdivision
Super.....	Superelevation
Sw.....	Swell
S/W.....	Sidewalk
SWG.....	Southwest Gas Corporation
T.....	Tangent Length
T.....	Township
TC.....	Top of Curb
TCE.....	Temporary Construction Easement
Trans.....	Transition
Trrk.....	Trash Rack
TS.....	Traffic Signal Pole
Typ.....	Typical
USW.....	US West Communications
VC.....	Vertical Curve
VCP.....	Vitrified Clay Pipe
VG.....	Valley Gutter
w/.....	with
w/o.....	without
WM.....	Water Meter
WV.....	Water Valve
WWF.....	Welded Wire Fabric

* Standard dictionary abbreviations not Included.

INDEX OF SHEETS

Sheet No.	Dwg No.	Sheet Type
1		Face Sheet
2	G-1.1	Design Sheet
3-4	G-1.2 - G-1.3	Construction Notes Sheet
5	G-1.4	Key Map
6	G-2.1	Storm Drain Summary Sheet
7-10	G-3.1 - G-3.4	Detail Sheets
11-12	G-4.1 - G-4.2	Geometric Layout Sheet
13-25	C-1.1 - C-1.13	Main Street Typical Section, Plan & Profile Sheets
26-28	C-2.1 - C-2.3	Sacaton Street Typical Section & Plan Sheets
29-30	C-3.1 - C-3.2	Staking Diagram Sheets
31-35	D-1.1 - D-1.5	Storm Drain Plan Sheets
36-39	D-2.1 - D-2.4	Storm Drain Profile Sheets
40-41	D-3.1 - D-3.2	Drainage Basin Layout Sheets
42	T-1.1	Signing Notes and Quantities
43-44	T-2.1 - T-2.2	Sign Summary/Formats
45	T-3.1	Pavement Marking Notes and Quantities
46-53	T-4.1 - T-4.8	Signing and Striping Sheets
54-56	T-5.1 - T-5.3	Main/Florence Traffic Signal and Details
57-58	T-6.1 - T-6.2	Sacaton/2nd Traffic Signal and Details
59	T-7.1	General Notes, Symbols & Conduit Schedule Sheet
60	T-7.2	Light Pole Schedule Sheet
61-66	T-7.3-T-7.8	Lighting Plan Sheets
67	L-1	Landscape General Notes
68-77	L-2 - L-11	Landscape Planting Plans
78-79	L-12 - L-13	Landscape Details
80	I-1	Irrigation General Notes
81-91	I-2 - I-12	Irrigation Plans
92-93	I-13 - I-14	Irrigation Details
1-14	CG-839	Arizona Water Company Water Plans

GROSS LENGTH OF PROJECT

Main Street	Sta 23+70.20 to Sta 52+57.67	=	2,887.47 ft
Casa Grande Ave	Sta 54+37.73 to Sta 56+61.89	=	224.16 ft
Jimmie Kerr Blvd	Sta 52+57.10 to Sta 54+42.48	=	185.38 ft
Sacaton Street	Sta 13+20.93 to Sta 19+71.19	=	650.26 ft
		=	3,947.27 ft

M.A.G. STANDARDS

NUMBER	DESCRIPTION
160	6' CHAIN LINK FENCE AND GATE
203	SCUPPERS
220	CURB AND GUTTER
222	SINGLE CURB AND TERMINATION
230	SIDEWALK
231	SIDEWALK RAMP
240	VALLEY GUTTER AND APRON
250	DRIVEWAY ENTRANCE
270	FRAME AND COVER
422	BRICK SEWER MANHOLE AND COVER FRAME ADJUSTMENT
520	MANHOLE
531	CATCH BASIN, TYPE B
537	CATCH BASIN, TYPE G
545	PIPE END SECTION

Two working days before you dig.
CALL FOR THE BLUE STAKES
1-800-782-5348
Blue Stake Center

NO.	DESCRIPTION OF REVISION	MADE BY	DATE

	NAME	DATE
DESIGN	SMM, EGM	02/07
DRAWN	WBE, SC	02/07
CHECKED	SCB, WDS	02/07

DMJM HARRIS | AECOM

City of Casa Grande
510 East Florence Blvd
Casa Grande, Arizona 85222

DESIGN SHEET

Registered Professional Engineer (Civil)
CERTIFICATE NO. 23997
EDITH GRIFFITH METTEY
Date Signed 2-7-07
ARIZONA U.S.A.

PROJECT NAME
DOWNTOWN STREETS - PHASE I

DWG NO. G-1.1

General Notes: Construction Inspection and Testing

1. All public Improvement Construction within the public right-of-way and onsite shall be conducted in accordance with, and conform to, the latest edition of the uniform standard specifications for Public Works Construction and Uniform Standard Details for Public Works Construction, Both as published by the Maricopa Association of Governments (M.A.G.).

2. Inspection of work per M.A.G. 105.10: The Engineer shall be permitted to inspect all materials, and each part or detail of the work at any time for the purpose of expediting and facilitating the progress of work. He shall be furnished with such information and assistance by the contractor, as is required to make a complete and detailed inspection. The City Engineer requires that the actual test result data sheet accompany all compaction test results submitted to the city's inspector. Pass/Fail statements are not acceptable without the attached data sheet. Failure to submit the test result data sheets will result in an incomplete submittal and the test will be rejected.

3. In the event of conflict between M.A.G. standard specifications and standard details and these plans, these plans shall prevail.

4. Construction surveying will be performed by owner.

5. The office of the City Engineer shall be notified at least forty eight (48) hours prior to the commencement of any work within the city right-of-way. TELEPHONE: 520-421-8600.

6. Contractor is to notify all public utilities at least two (2) working days prior to construction, for field locations of their respective facilities, by contacting the following: BLUE STAKE NUMBER: 1-800-782-5348.

7. Contractor shall coordinate and make arrangements for relocation of any utilities conflicting with the proposed construction of these plans, with the appropriate utility.

8. Removal of all miscellaneous structures, debris, rubble and other deleterious materials within the limits of construction shall be at the contractor's expense.

9. All concrete sidewalks, driveways, aprons, cross-pans, valley gutter, curbs and gutters landscaping and irrigation that may be damaged during the course of constructions shall be removed and replaced by the contractor at the contractor's expense.

10. Shoring is to be installed or a trench box is to be used, in all trenches in excess of five (5') feet in depth. A registered civil engineer or soils engineer shall certify shoring installation plans, details and specifications. Shoring must conform to OSHA 29 CFR, Part 1926, Subpart D.

11. Compaction testing is required and must be performed in the presence of a representative of the city engineer.

BACKFILL: Backfill within the public utility easements and within public street right-of-way compact to 95% of maximum theoretical density per ASTM D698. All materials outside the moisture limit shall be considered unsuitable, and subject to removal. No hydraulic compaction or water jet compaction will be allowed. All compaction must be done by mechanical means. Moisture limit spec. 3.0 percent below optimum moisture.

SUB-GRADE: Sub-grade preparation for all new streets and roadways shall consist of scarifying and loosening sub grade to a depth of six inches (6") . Sub-grade shall be constructed to achieve uniform moisture content by the addition of water and compacted to 95% of maximum density. Moisture shall be maintained between optimum and 4.0% below optimum moisture and shall be compacted to 95% on maximum theoretical density, as determined by ASTM D698. All materials outside the moisture limit at the time of placement and compaction shall be considered unsuitable and subject to removal.

12. Install four (4") inches of aggregate base course material, compacted to 100% under all sidewalks, alleyway and driveway entrances.

Aggregate materials shall have water added to them and shall be mixed and processed to produce a uniform blend of material before placement. After processing, the material shall be placed and spread on the prepared sub-grade and shall be placed in a uniform layer or layers not exceeding six (6") inches in compacted depth, unless otherwise approved in writing by the City Engineer. Each layer of aggregate base shall be compacted to a density of not less than 100% of the maximum density. The finished surface of aggregate base or sub-base shall not vary from the grades established by the City Engineer by more than: 0.04 of a foot above or below specified grade.

13. Compaction testing for sub-grade will be done after the sub-grade has been string lined and is within tolerance and accepted by the City Engineer. The City Engineer or his representative will direct the number and location of density tests. All sub-grades shall have a blue-top elevation set to finished grade and left and right edges of pavement, and centerline of roadway.

14. One (1) sand cone test shall be required for every ten (10) nuclear density tests performed, or when requested by the City Engineer or his representative. The City Engineer or Engineer's representative shall determine the locations of these sand cone tests.

15. All materials, including but not limited to aggregate base course, borrow material and native material, will be accepted in place only. Testing required for acceptance will include a sieve analysis and plasticity index, (P.I.). Determination of maximum theoretical density will be in accordance with ASTM D698. Only a four point proctor test will be accepted.

16. The base course shall not be placed on sub-grade until the City Engineer has accepted the sub-grade. All materials will be accepted in place only.

17. Compaction densities: M.A.G. type I Backfill material (Section 601.4.4) is modified to include areas under the pavement, right-of-way, and easements for all trenches including sewer, water, electric, gas, telephone, and storm drains, moisture spec. 3.0 percent below optimum moisture, compact to 95% of maximum theoretical density. All materials outside the moisture spec. limit shall be considered unsuitable, subject to removal.

18. All curb, gutter and sidewalk expansion joint filler will be ½" bituminous pre-molded strips. All expansion joint spacing shall not exceed a maximum of (50') feet or as directed by the City Engineer. Concrete curing compound material shall be a white pigment membrane used on all concrete structures including curb & gutter, sidewalk, headwall, catch basins and sidewalk ramps.

19. Paving will not commence until aggregate base course compaction and gradation tests are completed and the City Engineer accepts the results.

Two working days before you dig.
CALL FOR THE BLUE STAKES
1-800-782-5348
Blue Stake Center

NO.	DESCRIPTION OF REVISION	MADE BY	DATE

	NAME	DATE
DESIGN	SMM, EGM	02/07
DRAWN	WBE, SC	02/07
CHECKED	SCB, WDS	02/07

City of Casa Grande
510 East Florence Blvd
Casa Grande, Arizona 85222

DMJM HARRIS | AECOM

CONSTRUCTION NOTES

Registered Professional Engineer (Civil)
CERTIFICATE NO. 23987
EDITH GRIFFITH METTEY
Date Signed 3-7-07

PROJECT NAME
DOWNTOWN STREETS - PHASE I

DWG NO. G-1.2

Sheet No.
3 of 93

PAVING NOTES

1. All grading, excavation, paving, trenching, pipe bedding and backfill shall comply with the recommendations set forth in the SOILS (Geo-Technical) report for this project and the referenced required specifications and details. SOILS report and pavement design were prepared:
BY: Kleinfelder, Inc. JOB NO. 52-5060-01(001) DATED: March 1999

2. The contractor shall verify the locations, elevations and horizontal controls of all existing utilities at point of tie-in prior to commencing any new construction. Should any location, elevation or control differ from that shown on these plans, the contractor shall contact the owner's agent.

3. The contractor shall give 72 hours notice to the City Engineer prior to any construction activity within the right-of-way.

4. The City Engineer must approve all plan revisions in writing prior to construction of any changes to approved plans.

5. Upon commencement of work, traffic control devices shall be posted and maintained by the contractor until such time as work is completed.

6. Removal and relocation of all mailboxes, fences, signs, gates, posts pipes, etc., within the right-of-way and construction limits shall be directed by the City Engineer.

7. Concrete collars, on all utility and survey monument frame adjustments, are to be installed flush with the proposed or existing pavement.

8. Paint for pavement marking and striping shall be thermal traffic paint applied in a single coat in accordance with Section 704 of ADOT Standard Specification.

9. Street cuts on asphalt pavement: Cut existing pavement at one (1') from the utility trench cut, per M.A.G. Std Detail 200 type (T) top; Tack edges. Match existing asphaltic concrete in kind. Asphalt concrete shall be tested for compaction, to 95% of maximum density. The contractor, at his expense, will have a private lab core sample and run a Marshall for compaction test, for acceptance on all street cuts.

10. All construction & test methods shall be in conformance with the city of Casa Grande and Maricopa Association of Governments (M.A.G.) Uniform Standards Specifications and Details for Public Works Construction, latest edition and revisions thereto.

11. Asphaltic concrete shall conform to M.A.G. USSD Section 710 mix specifications.

12. All concrete shall comply with M.A.G. Section 725; class A, 3000-PSI compressive strength at 28 days, unless otherwise specified. Contractor shall supply mix design to the City Engineer for approval prior to placement. Contractor shall supply a copy of each batch ticket to the City Engineer or his representative.

13. A copy of the City approved plans must be kept on-site at all times, during the course of construction.

14. In the event of any dispute between these plans and M.A.G. standard specifications, these approved plans shall prevail.

15. The contractor is responsible for final adjustment of all manholes, valves, clean-outs, water meter boxes, j-boxes, etc.

16. Contractor's testing of A/C mix prior to placement is required and results are to be delivered to the City Engineer or his representative prior to paving.

17. Rolling patterns required by the geo-technical testing firm shall also be supplied to the Engineers representative.

18. Core testing of newly constructed asphalt concrete surfaces will be required. Contractor shall furnish rolling pattern and test results to the Engineer.

19. Protection of valley gutters, cross-pans and aprons during paving operations shall be the responsibility of the contractor and all damaged concrete shall be replaced prior to acceptance.

20. Tack seal shall be required all vertical concrete surfaces prior to placement of asphalt. This requirement also applies to vertical asphaltic concrete surfaces and at all joints of new lifts.

21. The surveyor shall perform installation and straddling of monuments. Once stamped, datum shall be part of the as-built plans.

22. Street sign bases, poles and signs shall be installed prior to the final walk-through and acceptance into any warranty period.

23. Right-of-way grading shall be completed prior to the final walk-through and shall be held one (1") inch below back of walk. (B.O.W.)

24. Valley gutters and aprons that are to be removed and replaced shall match existing radii and gutter elevations unless directed otherwise by the engineer.

GRADING NOTES

1. Site area: 9 net acres.

2. Approved drainage report:
BY: Entranco DATED: February 2003
JOB NUMBER: 2-30-98064

3. Approved geo-technical report:
BY: Kleinfelder, Inc. DATED: March 1999
JOB NUMBER: 52-5060-01(001)

4. The contractor is responsible for complying with all necessary regulations and requests by the city and Pinal County regarding dust control.

5. Removal of all cacti and native plants shall be in accordance with the provisions of the "Arizona Native Plant Law" A.R.S. Chapter 7.

6. Contractor must keep public streets clear of soil, mud, and debris at all times.

7. Contractor must prevent damage by drainage during grading construction.

8. Contractor must correct any damage to public or private property that results from work done under the approval of grading permit.

9. The contractor shall prepare a Stormwater Pollution Prevention Plan and follow the requirements set forth by ADEQ. The contractor shall file the Notice of Intent (NOI) and Notice of Termination (NOT) required by ADEQ for the AZPDES permit. Copies of the plan, NOI, and NOT shall be provided to the engineer.

10. All on-site grading must comply with Chapter 70 of the Uniform Building Code.

11. All grading in the public right-of-way must comply with M.A.G. Specifications and Standard Details; the engineer's approved plans and specifications for the project; and the soils engineer's geotechnical report for the project.

12. All slopes that are steeper than 3:1 shall be rip-rapped or shall be re-vegetated as approved by the City of Engineer.

GENERAL NOTES

1. All work to conform to the MAG Uniform Standard Specifications for Public Works Construction dated 2006, and current revisions thereto, together with the MCDOT Supplement to the MAG Standard Specifications and the Special Provisions.

2. Standard Details refer to the MAG Standard Details for Public Works Construction unless noted otherwise.

3. All existing utility lines shown on the plans are from available utility records. The Contractor shall verify the actual location before starting construction. The Contractor shall contact "Blue Stake", 1-800-782-5348, prior to beginning construction.

4. Utilities interfering with construction shall be reset or relocated by the utility company concerned unless noted otherwise.

5. Disposal of all waste material, broken concrete, etc. will be the responsibility of the contractor, subject to the approval of the Engineer.

6. All stations and callout distances left and right refer to the new construction centerline unless noted otherwise.

7. A materials list for water modifications shall be submitted to the Engineer. The list shall include manufacturer, part number, price and quantity.

Two working days before you dig.
CALL FOR THE BLUE STAKES
1-800-782-5348
Blue Stake Center

NO.	DESCRIPTION OF REVISION	MADE BY	DATE

	NAME	DATE
DESIGN	SMM, EGM	02/07
DRAWN	WBE, SC	02/07
CHECKED	SCB, WDS	02/07

City of Casa Grande
510 East Florence Blvd
Casa Grande, Arizona 85222

DMJM HARRIS | AECOM

CONSTRUCTION NOTES

PROJECT NAME
DOWNTOWN STREETS - PHASE I

Registered Professional Engineer (Civil)
CERTIFICATE NO. 23987
EDITH GRIFFITH WETTEY
Date Signed 2-7-07

DWG NO. C-1.3
Sheet No.
4 of 93

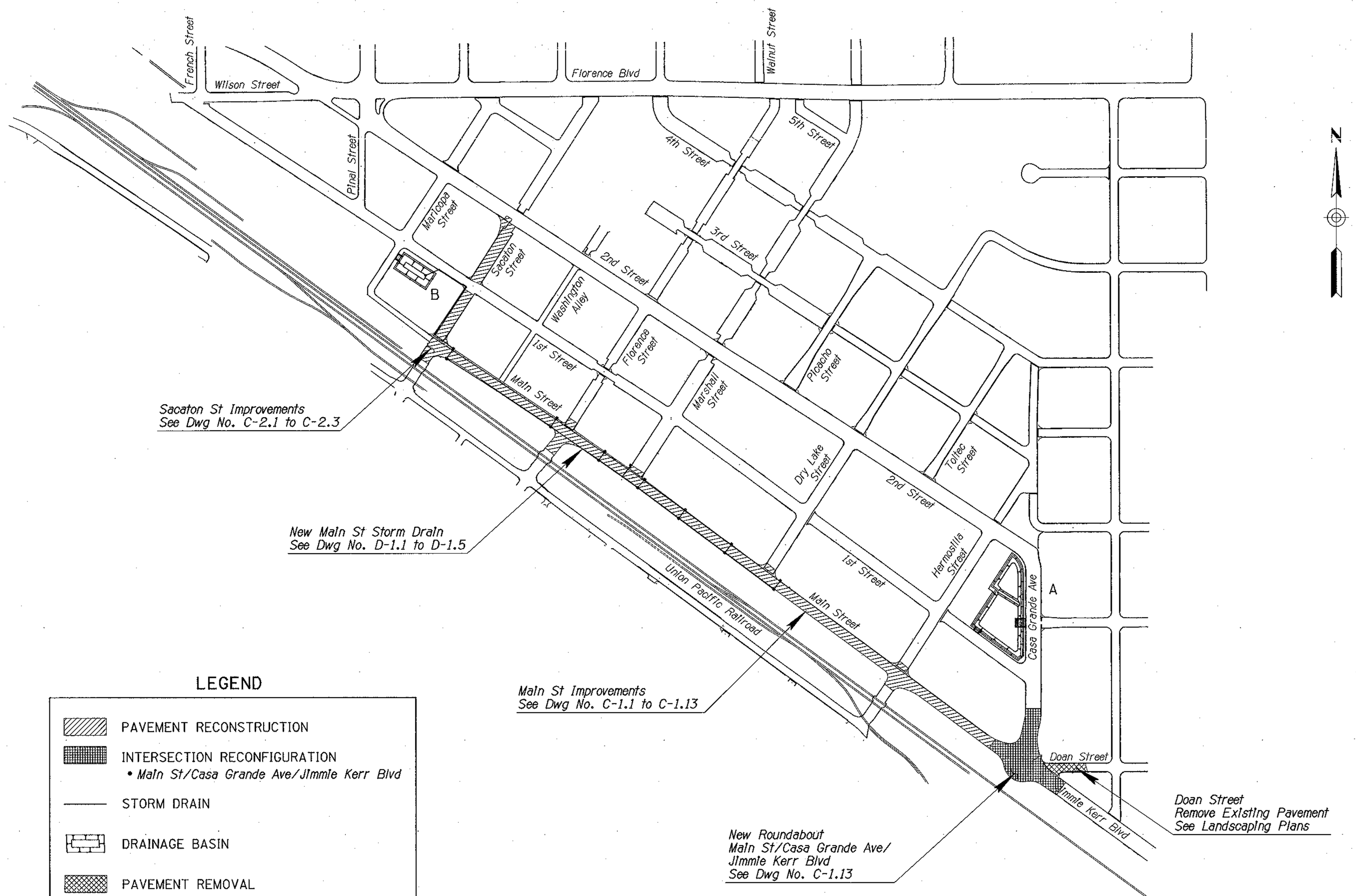

LEGEND

- PAVEMENT RECONSTRUCTION
- INTERSECTION RECONFIGURATION
  - *Main St/Casa Grande Ave/Jimmie Kerr Blvd*
- STORM DRAIN
- DRAINAGE BASIN
- PAVEMENT REMOVAL

Two working days before you dig.
CALL FOR THE BLUE STAKES
1-800-782-5348
Blue Stake Center

NO.	DESCRIPTION OF REVISION	MADE BY	DATE

	NAME	DATE
DESIGN	SMM, EGM	02/07
DRAWN	WBE, SC	02/07
CHECKED	SCB, WDS	02/07

DMJM HARRIS | AECOM

City of Casa Grande
510 East Florence Blvd
Casa Grande, Arizona 85222

KEY MAP

PROJECT NAME
DOWNTOWN STREETS - PHASE I

Registered Professional Engineer (Civil)
CERTIFICATE NO. 23987
EDITH GRIFFITH METTEY
Date Signed 4-7-07

DWG NO. G-1.4
Sheet No.
5 of 93

NOTE:
THE ZEROS IN PARENTHESIS (0, 0.0 & 0.00) IN THE HEADING OF SOME OF THE COLUMNS ARE THE RECOMMENDED PRECISION OF THE VALUE TO BE ENTERED IN THE COLUMN.

NOTE:
FOR PIPE CULVERT PLACEMENT SEE STANDARD DRAWING C-13.15

NOTE:
PIPE OPTIONS SELECTED ARE THOSE REQUIRED TO MEET MINIMUM SERVICE LIFE.
SHADED PIPE OPTION FIELDS ARE NOT ALLOWABLE ALTERNATES.

CSP - CORRUGATED STEEL PIPE
CAP - CORRUGATED ALUMINUM PIPE
RCP - REINFORCED CONCRETE PIPE
NRCP - NON-REINFORCED CONCRETE PIPE
NRCIPCP - NON-REINFORCED CAST-IN-PLACE CONCRETE PIPE
CHDPEPP - CORRUGATED HIGH DENSTIY POLYETHYLENE PLASTIC PIPE

DESCRIPTION							CSP									CAP					RCP					NRCP	NRCIPCP	CHDPEPP	END TREATMENT															QUANTITIES	
			In.	In.	Ft.	Degree	In.	Coating								In.											In.		Each	Catch basin, Manhole, Headwall & Junction Structure														Cubic Yard	
																													End Sec	Ea			Ft.			Grate/Rim	Ft.									
Station Main St.	Plan Ref No.	Controlling Fill Height Range	Size, Corrugated	Size, Smooth	Length (0)	Skew (0)	Corrugation	Wall Thickness (0.00)	Zinc	Bit. Coated Zinc	Aluminum	Bit. Coated Aluminum	Corrugation	Wall Thickness (0.00)	Uncoated	Bit. Coated	Class - Non Trench	Class - Trench	Class	Min Wall Thickness (0)	AASHTO M-294 Type C	AASHTO M-294 Type S	C-13.20 & C-13.25	Detail -	Size, (In) Manhole	Standard or Detail	S-Single / D-Double	Location	H (0.0)	L Wing (0.0)	L 18" Slotted Drn (0)	L 24" Slotted Drn (0)	Type	Elev. (0.00)	Depth	L (0.0)	Inlet Depression	Pipe Exc (0)	Pipe Bk-fl (0)	Drn Exc (0)	Berm/Dike Emb (0)	REMARKS
40+45 to 40+45	D1			24	40												III								533		L†		17				1398.27	2.0							
40+45 to 38+01	D2			30	238												III								531		R†						1398.27	2.0							
38+01 to 35+71	D5			30	223												III								531		R†						1397.56	2.0							
38+01 to 38+01	D7			18	40												IV								532		L†						1397.56	2.0							
35+71 to 35+71	D8			18	40												IV								531		L†						1397.44	2.0							
35+71 to 33+66	D9			30	198												III								531		R†						1397.44	2.0							
33+66 to 32+90	D12			30	70												III								531		R†						1397.41	2.0							
32+90 to 31+75	D13			30	110												III							48	520		R†						1398.17								
31+75 to 29+40	D14			30	228												III								531		R†						1397.14	2.0							
29+40 to 26+82	D15			30	253												III								531		R†						1397.05	2.0							
26+82 to 24+43	D16			30	234												III							48	520		R†						1398.28								
24+43 to 24+43	D17			30	46												IV								531		R†						1396.34	2.0							
24+43 to 23+51	D18			30	88												IV								531		L†						1396.50	2.0							
23+51 to 15+46 (Sacaton St)	D19			30	113												III							48	520		L†						1396.17								
33+68 to 33+66	D23			18	40												IV								531		L†						1397.41	2.0							
32+93 to 32+90	D24			18	52												IV								531		L†						1397.40	2.0							
31+75 to 31+75	D25			18	40												IV								531		L†						1397.14	2.0							
29+40 to 29+40	D26			18	40												IV								531		L†						1397.05	2.0							
Station Sacaton St.																																														
15+46 to 16+61	D20			30	115												III							48	520		L†						1396.30								
16+61 to 16+60	D21			30	130												III							48	520		L†						1396.09								
16+60 to 16+16	D22			30	53												III							48	520		L†						1395.27								
Sheet Total					2035																																									

REV. DATE: 01-05-2000

FILL HEIGHT RANGE TABLE (Ft.)													
RANGE NO.		1	2	3	4	5	6	7	8	9	10	11	12
FILL	>	1	3	5	8	11	15	20	25	30	40	55	70
HEIGHT (Ft.)	≤	3	5	8	11	15	20	25	30	40	55	70	90

SHOULD FIELD CONDITIONS VARY FROM THE RANGE INDICATED, CONTACT DESIGN FOR RE-EVALUATION OF PIPE DESIGN REQUIREMENTS.

PIPE CORRUGATION			
A	2⅔x½	D	6x2
B	3x1	E	3x1 or 9x2½
C	9x2½		

Two working days before you dig.
CALL FOR THE BLUE STAKES
1-800-782-5348
Blue Stake Center

NO.	DESCRIPTION OF REVISION	MADE BY	DATE

	NAME	DATE
DESIGN	JAS	02/07
DRAWN	ETB, RLH, JMS, SC	02/07
CHECKED	MHB, EGM, WDS	02/07

DMJM HARRIS | AECOM

City of Casa Grande
510 East Florence Blvd
Casa Grande, Arizona 85222

STORM DRAIN SUMMARY

REGISTERED PROFESSIONAL ENGINEER (CIVIL) CERTIFICATE NO. 20959 JOHN P VAN ECHO ARIZONA U.S.A.

PROJECT NAME
DOWNTOWN STREETS - PHASE I

DWG No. G-2.1
Sheet No.
6 of 93

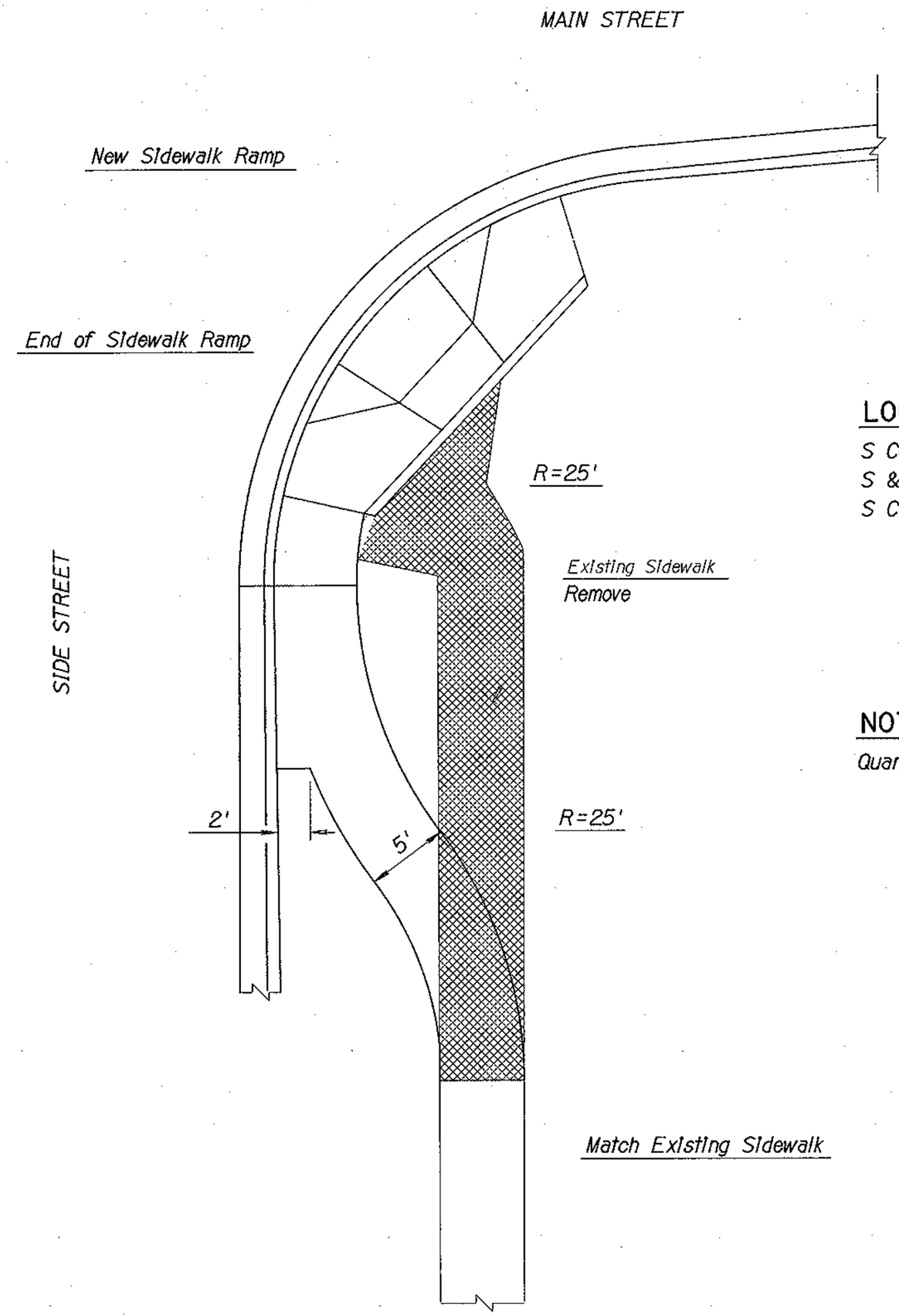

LOCATIONS:

S Corner Sacaton St/Main St
S & W Corner Florence St/Main St
S Corner Hermisillo St/Main St

NOTE:

Quantities shown on appropiate plan

DETAIL A

SIDEWALK PAVEMENT DETIAL

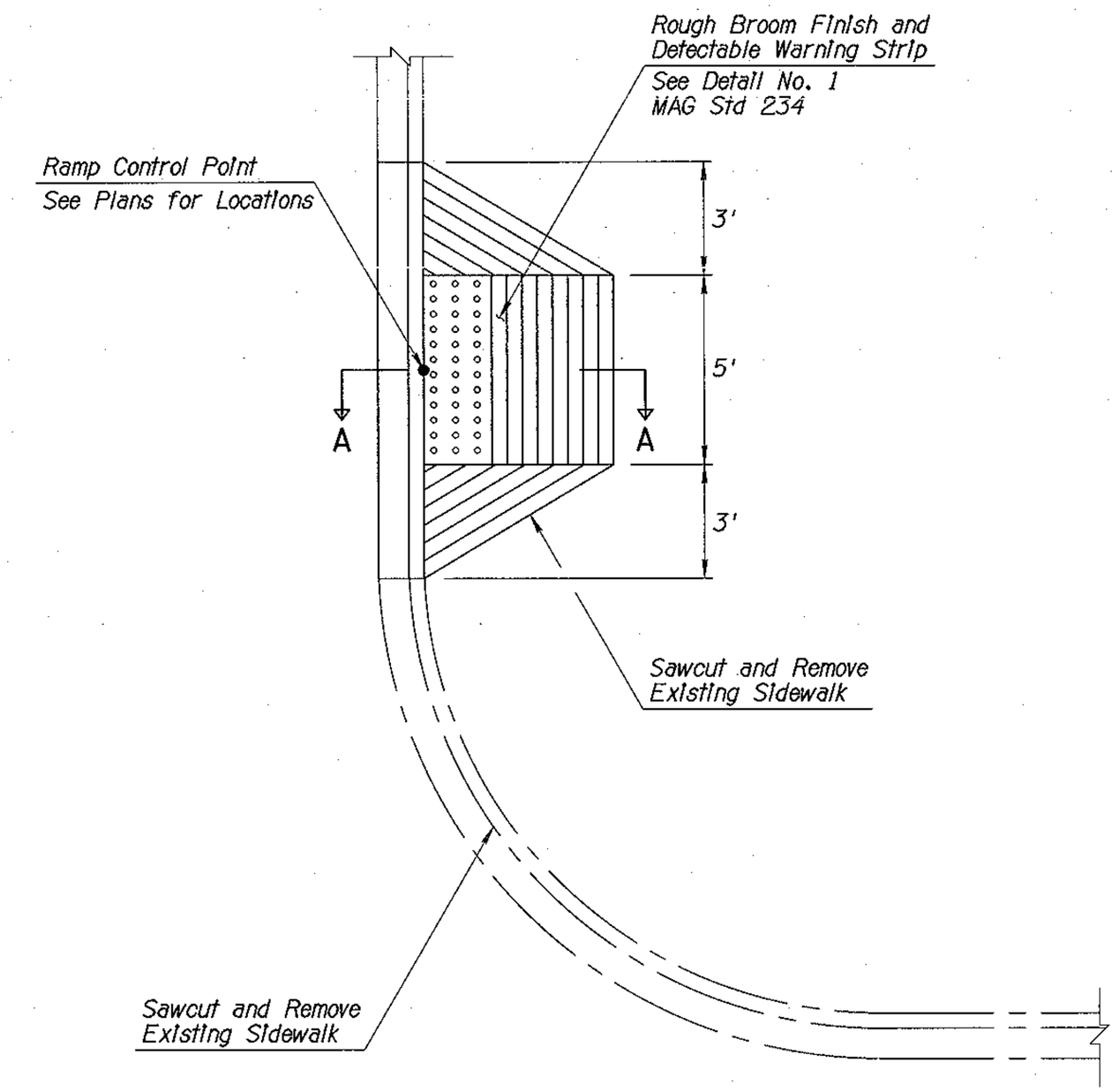

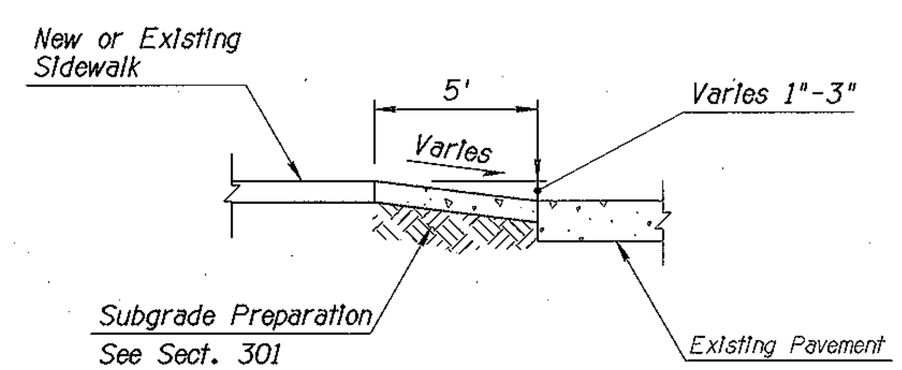

SECTION A-A

NOTE:

Class 'B' Concrete Construction as per Sect. 725.

DETAIL B

MODIFIED SIDEWALK RAMP

Two working days before you dig.
CALL FOR THE BLUE STAKES
1-800-782-5348
Blue Stake Center

NO.	DESCRIPTION OF REVISION	MADE BY	DATE

	NAME	DATE
DESIGN	SMM, EGM	02/07
DRAWN	WBE, SC	02/07
CHECKED	SCB, WDS	02/07

City of Casa Grande
510 East Florence Blvd
Casa Grande, Arizona 85222

DMJM HARRIS | AECOM

DETAIL SHEET
DETAILS A & B

PROJECT NAME
DOWNTOWN STREETS - PHASE I

Registered Professional Engineer (Civil)
CERTIFICATE NO. 23987
EDITH GRIFFITH METTEY
Date Signed 2-7-07

DWG NO. G-3.1
Sheet No.
7 of 93

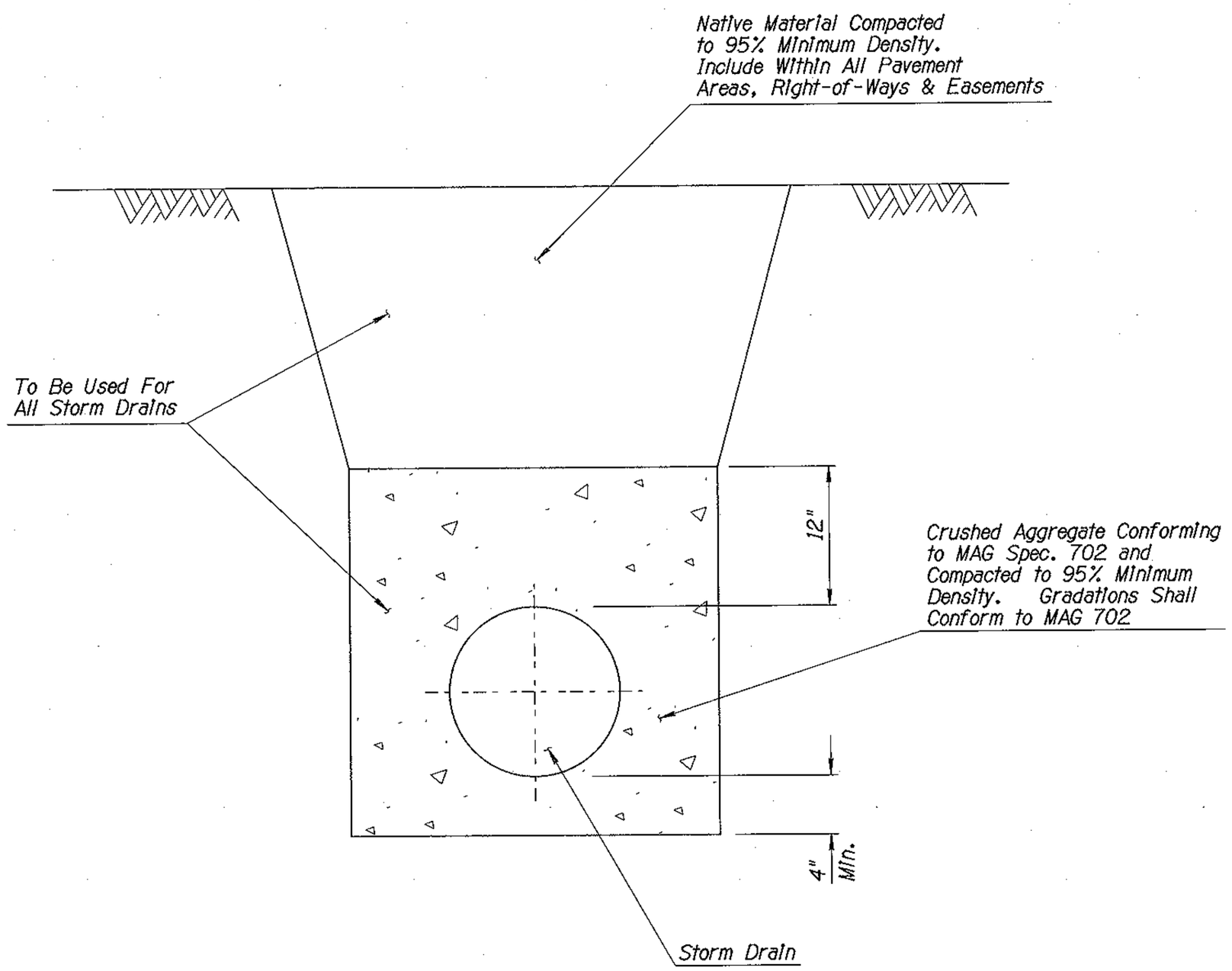

DETAIL C

TYPICAL BEDDING AND BACKFILL DETAIL

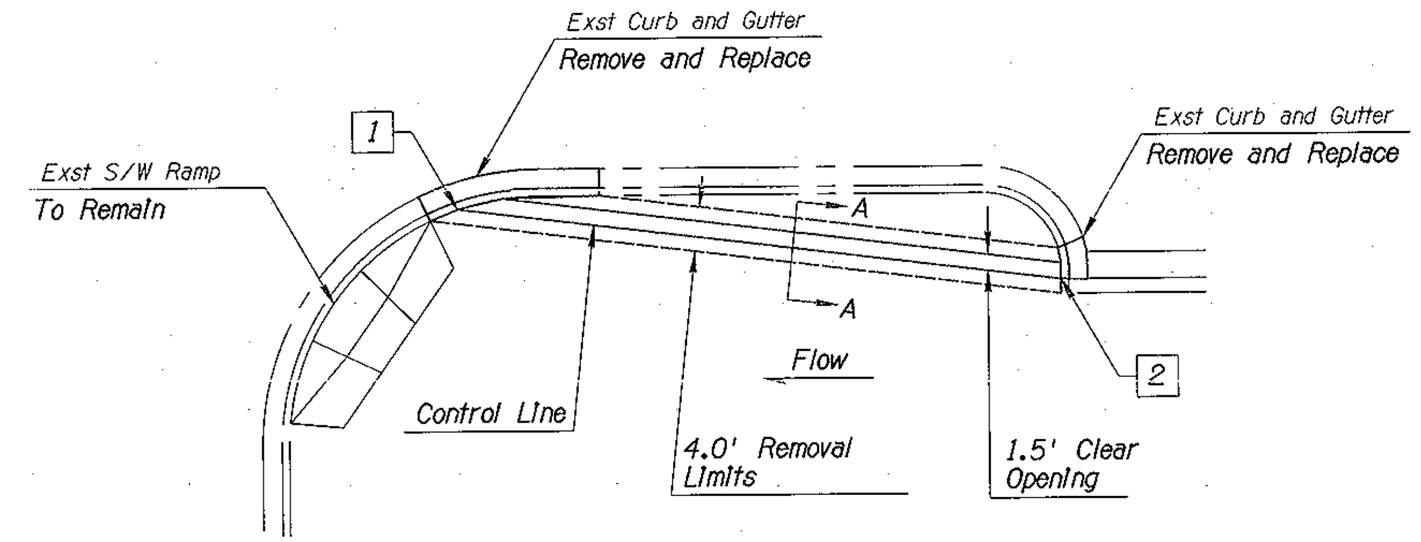

TYPICAL PLAN VIEW

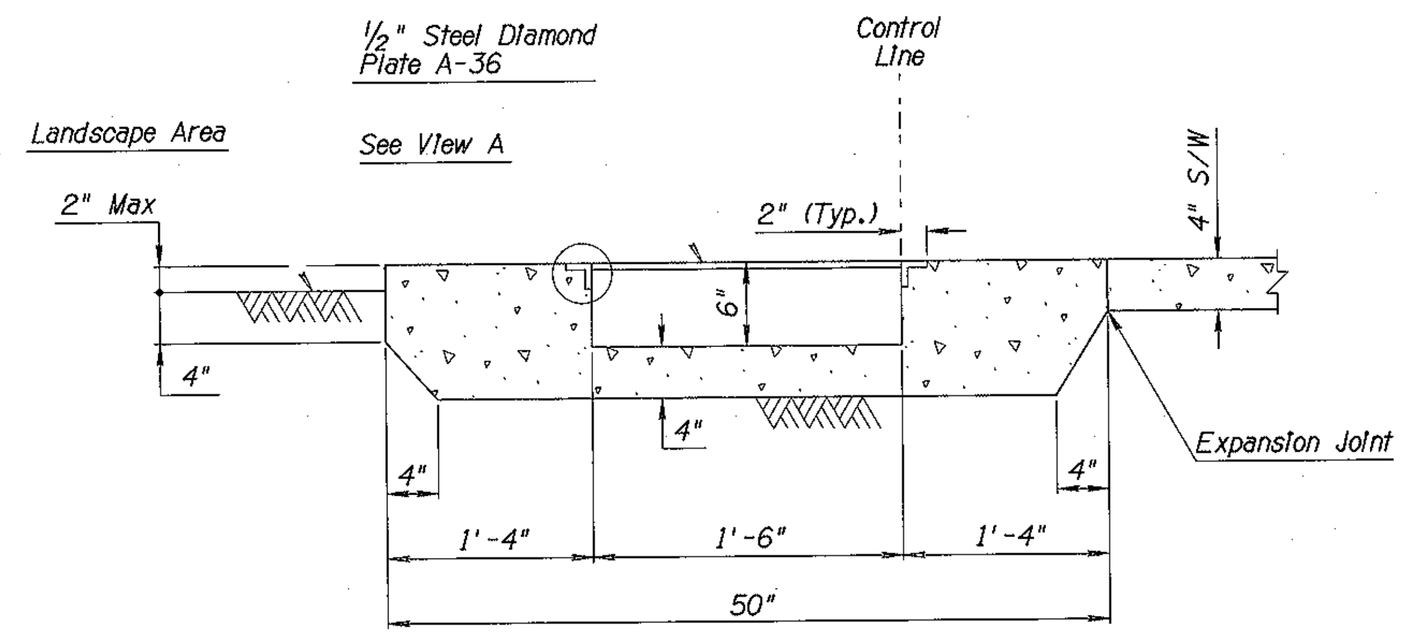

SECTION A-A

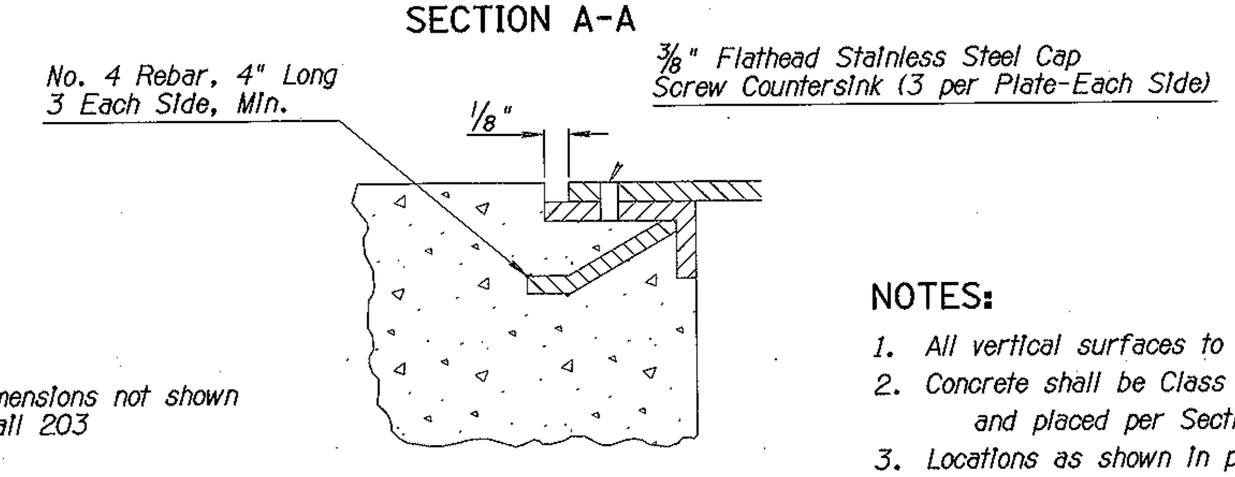

VIEW A

NOTE:

For Details & Dimensions not shown See MAG Std Detail 203

NOTES:

1. All vertical surfaces to be formed.
2. Concrete shall be Class "B" per Section 725 and placed per Section 505.
3. Locations as shown in plans or as directed by the Engineer.
4. Paint Steel According to Section 790 Paint Number 1-A or 1-B

Scupper Control Points			
PT No.	Station	Offset	Reference Centerline
1	20+38.40	20.68' Rt	Sacaton St
2	20+53.86	24.57' Rt	Sacaton St

DETAIL D

STEEL PLATE COVERED SCUPPER

Two working days before you dig. CALL FOR THE BLUE STAKES 1-800-782-5348 Blue Stake Center

NO.	DESCRIPTION OF REVISION	MADE BY	DATE

	NAME	DATE
DESIGN	SMM, EGM	02/07
DRAWN	WBE, SC	02/07
CHECKED	SCB, WDS	02/07

City of Casa Grande
510 East Florence Blvd
Casa Grande, Arizona 85222

DMJM HARRIS | AECOM

DETAIL SHEET
DETAIL C & D

PROJECT NAME
DOWNTOWN STREETS - PHASE I

Registered Professional Engineer (Civil) CERTIFICATE NO. 23987 EDITH GRIFFITH METTEY Date Signed 4-7-07 Arizona U.S.A.

DWG NO. G-372

Sheet No.
8 of 93

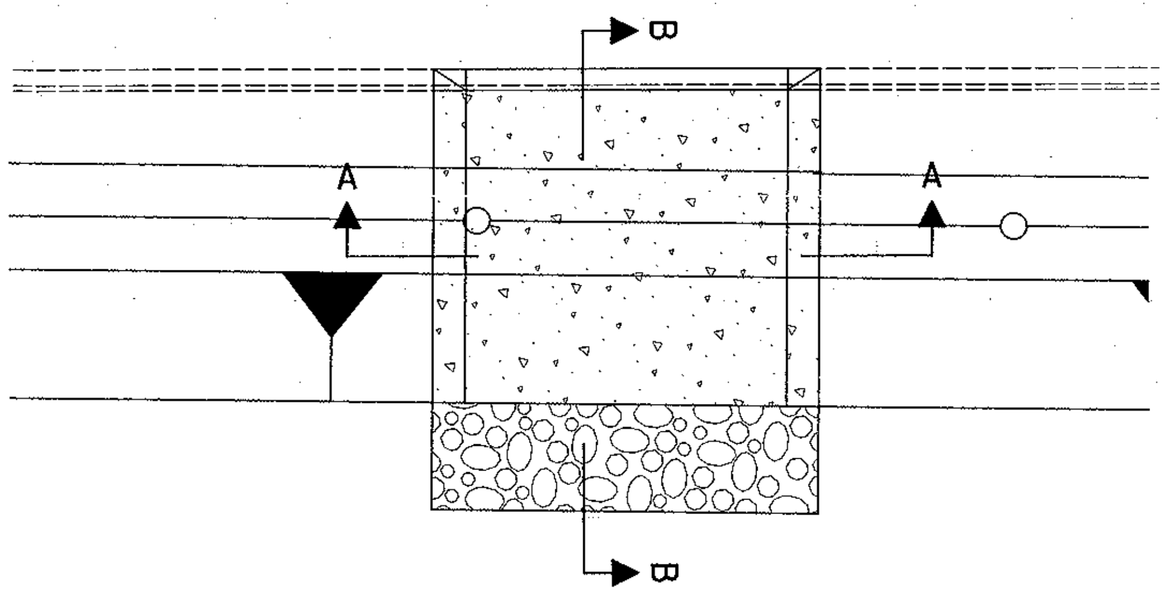

DETENTION/RETENTION BASIN WEIR INLET

NTS

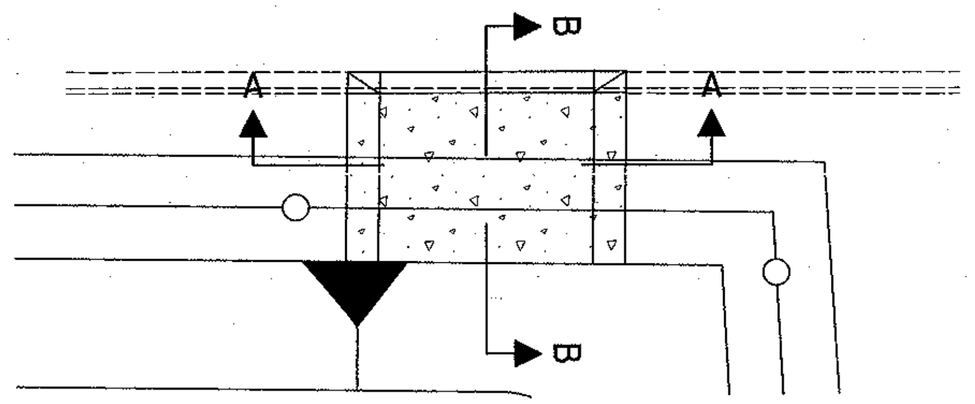

DETENTION/RETENTION BASIN WEIR OUTLET

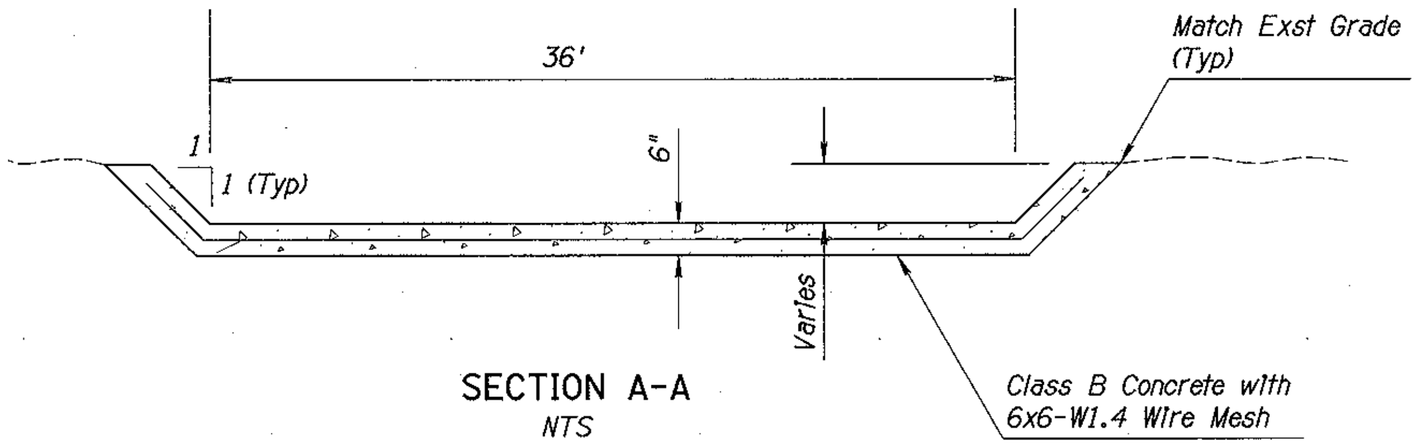

SECTION A-A

NTS

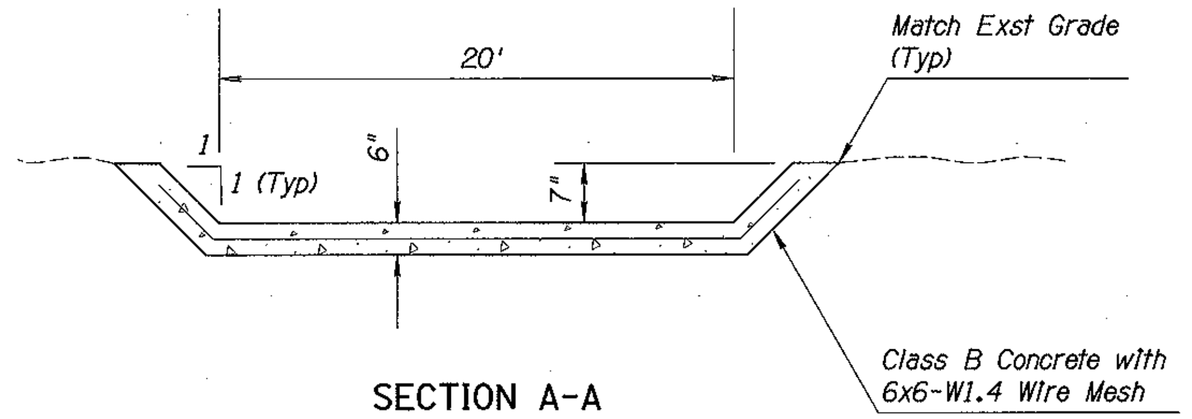

SECTION A-A

NTS

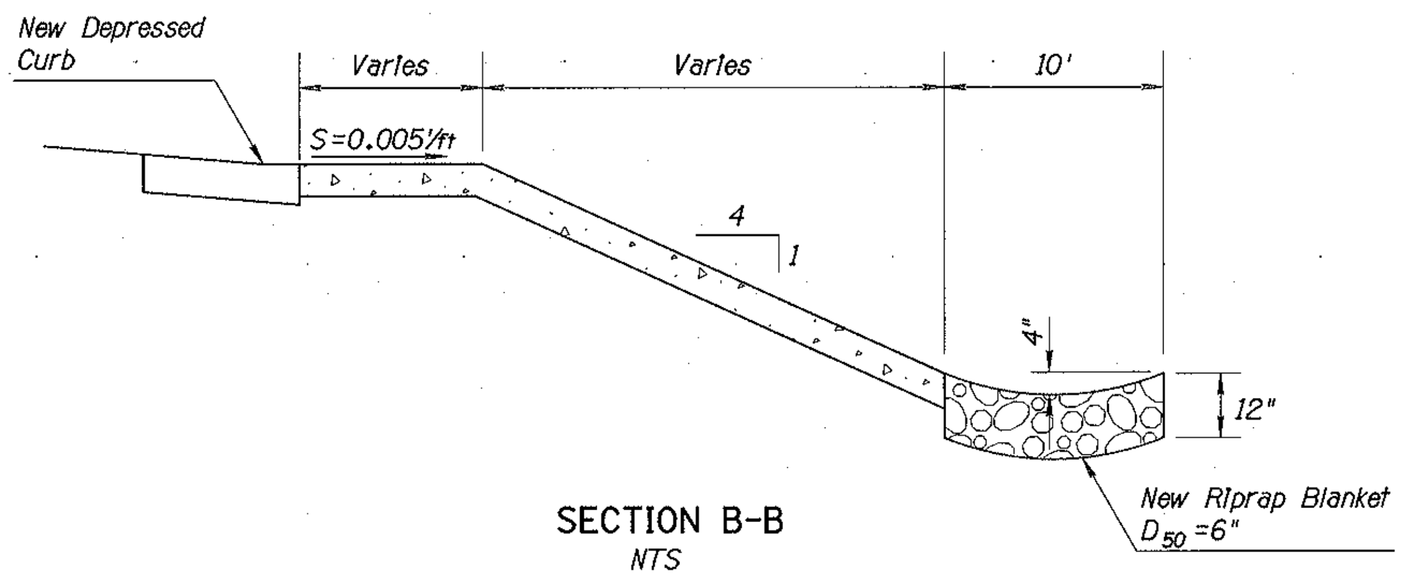

SECTION B-B

NTS

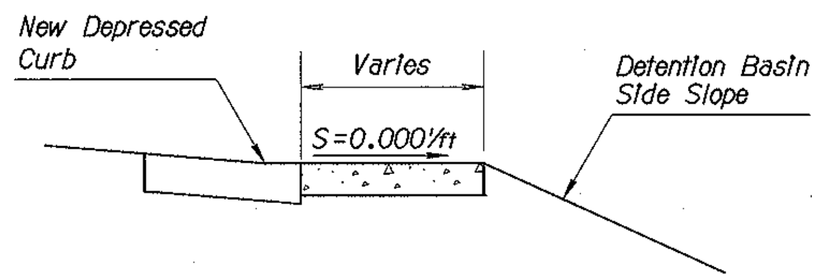

SECTION B-B

NTS

DETAIL E

DETENTION/RETENTION BASIN DETAILS

Two working days before you dig.
CALL FOR THE BLUE STAKES
1-800-782-5348
Blue Stake Center

NO.	DESCRIPTION OF REVISION	MADE BY	DATE

	NAME	DATE
DESIGN	SMM, EGM	02/07
DRAWN	WBE, SC	02/07
CHECKED	SCB, WDS	02/07

City of Casa Grande
510 East Florence Blvd
Casa Grande, Arizona 85222

DMJM HARRIS | AECOM

DETAIL SHEET
DETAIL E

Registered Professional Engineer (Civil)
CERTIFICATE NO. 23987
EDITH GRIFFITH METTEY
Date Signed 2-7-07

PROJECT NAME
DOWNTOWN STREETS - PHASE I

DWG NO. G-3.3

Sheet No.
9 of 93

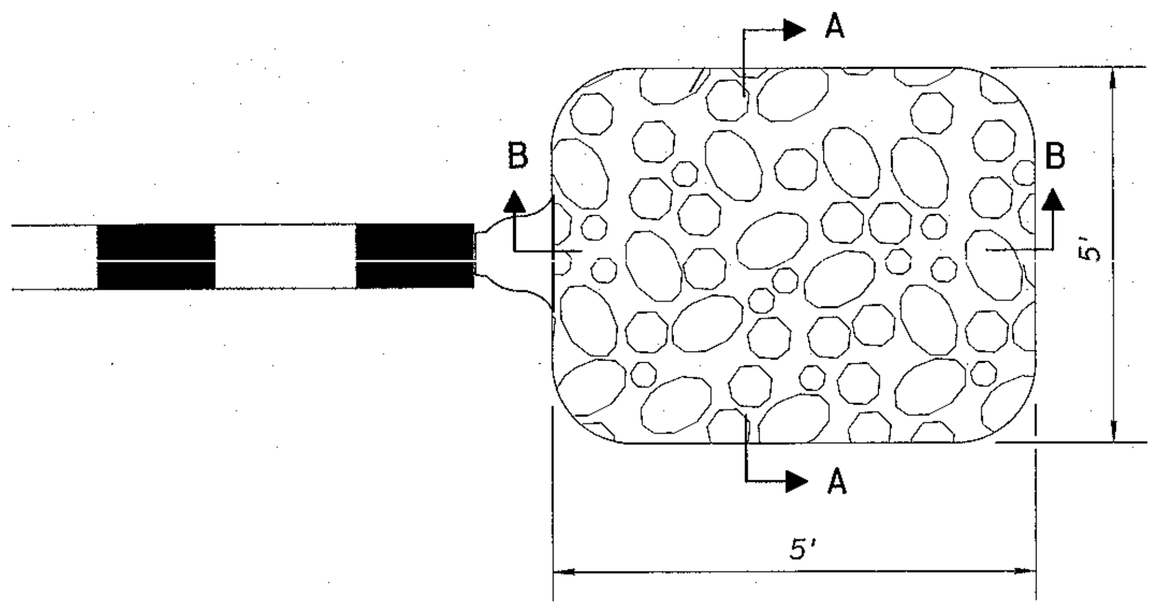

PIPE OUTLET
PLAN
NTS

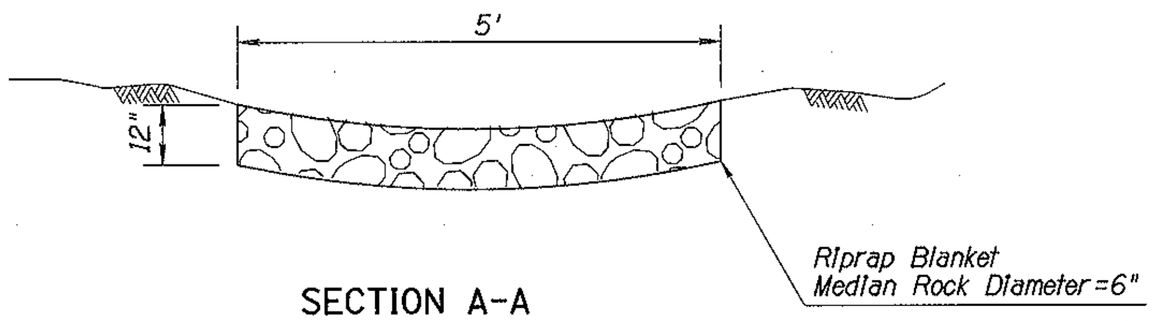

SECTION A-A

NTS

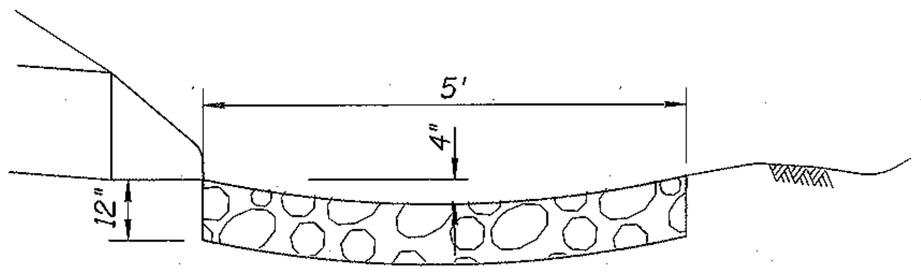

SECTION B-B
NTS

DETAIL F

PIPE OUTLET DETAILS

Two working days before you dig.
CALL FOR THE BLUE STAKES
1-800-782-5348
Blue Stake Center

NO.	DESCRIPTION OF REVISION	MADE BY	DATE

	NAME	DATE
DESIGN	SMM, EGM	02/07
DRAWN	WBE, SC	02/07
CHECKED	SCB, WDS	02/07

City of Casa Grande
510 East Florence Blvd
Casa Grande, Arizona 85222

DMJM HARRIS | AECOM

DETAIL SHEET
DETAIL F

Registered Professional Engineer (Civil)
CERTIFICATE NO. 23987
EDITH GRIFFITH METTEY
Date Signed 2-7-07

DWG NO. G-3. 4

PROJECT NAME
DOWNTOWN STREETS - PHASE I

Sheet No.
10 of 93

BASIS OF BEARING

The North line of Section 29 T6S R6E

Bearing of this line: N 89°37'28" E

The measured distance from NW corner of Sec 29 to NE corner of Sec 29 is 5309.14'

The elevation of the NW corner of Sec 29 is 1393.85' based on bench loops provided by the City of Casa Grande.

Geoid 99, WGS 84

The local coordinate system was used for Horizontal.

GEOMETRIC POINT TABLE

NO.	NORTHING	EASTING	ELEVATION
A	10778.63	9041.92	1396.66'
B	10727.46	11183.73	1402.41'
C	10377.16	7242.43	1390.40'
D	9568.72	7135.73	1391.80'
E	8066.73	9183.20	1398.46'
F	7691.24	10858.00	1404.27'
G	7339.29	10930.76	1405.12'

GEOMETRIC DATA TABLE

NO.	STREET NAME	STATION	NORTHING	EASTING
1	Main Street Sacaton Street	POB 23+70.20= 14+06.41, 0.30' Rt	9394.0164	8139.6424
2	Main Street	26+58.53	9232.7150	8378.5490
3	Main Street Florence Street	30+00.02= 13+99.95, 0.20' Rt	9041.5340	8661.7150
4	Main Street Marshall Street	PI 33+26.05= 13+90.44, 0.45' Rt	8854.1307	8928.2920
5	Main Street	PI 39+86.62	8457.6944	9456.6721
6	Main Street	PI 46+47.21	8064.0590	9987.1704
7	Main Street	PI 51+01.65	7792.6652	10351.6692
8	Main Street Jimmie Kerr Casa Grande Ave	PI 52+57.38 = POB 52+57.10 = POE 56+60.76 =	7709.7632	10483.5031
9	Jimmie Kerr	PI 53+05.11	7687.6758	10526.1319
10	Casa Grande Ave	PT 54+95.16	7871.0846	10520.8886
11	Casa Grande Ave	PC 54+43.47	7922.3250	10526.8160
12	Casa Grande Ave	POB 49+15.99	8449.8050	10528.2930
13	Florence Street	PI 13+87.25	9030.9700	8654.6530
14	Florence Street	PI 23+32.34	9824.6880	9167.6890
15	Florence Street	PI 26+61.50	10100.0650	9348.0100
16	Florence Street	PC 27+74.74	10195.1037	9409.5827
17	Florence Street	PT 28+88.97	10303.1022	9441.7294
18	1st Street	PI 20+37.92	9806.7520	8011.3550
19	1st Street	PI 9+98.05	10379.1980	7143.2320
20	Sacaton Street	PI 12+31.25	9248.0370	8042.8280
21	Sacaton Street 1st Street	PI 13+95.88 = PI 23+37.92	9385.3900	8133.5900
22	Sacaton Street	PI 16+79.18	9621.8230	8289.6570
23	Sacaton Street	PI 26+18.91	10412.5000	8797.5140

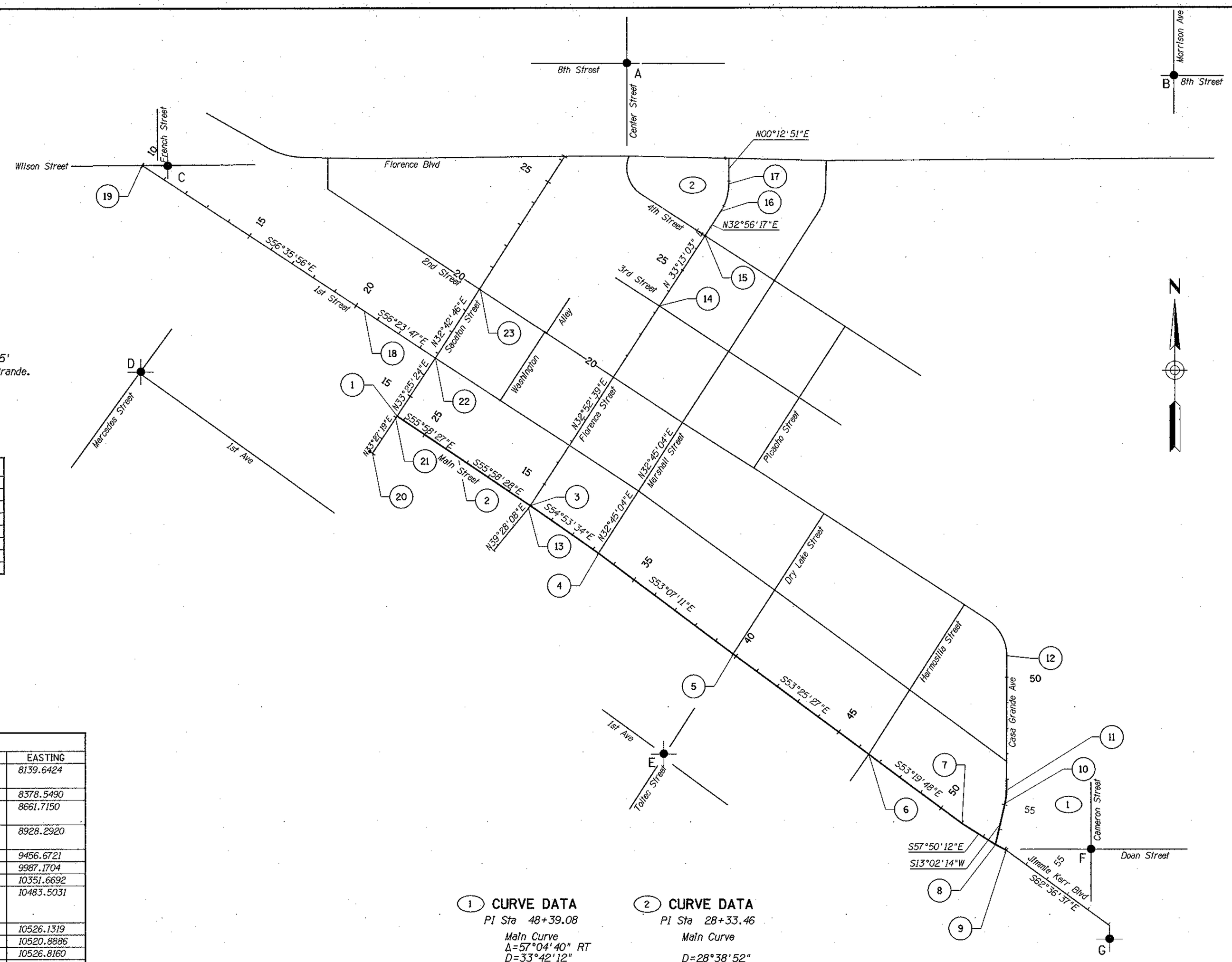

(1) CURVE DATA

PI Sta 48+39.08

Main Curve
Δ=57°04'40" RT
D=33°42'12"
R=170.00'
L=169.35'
T=92.45'
Ext=23.51

(2) CURVE DATA

PI Sta 28+33.46

Main Curve

D=28°38'52"
R=200.00'
L=114.23'
T=58.72'
Ext=8.44

Two working days before you dig.
CALL FOR THE BLUE STAKES
1-800-782-5348
Blue Stake Center

	NAME	DATE
DESIGN	SMM, EGM	02/07
DRAWN	WBE, SC	02/07
CHECKED	SCB, WDS	02/07

City of Casa Grande
510 East Florence Blvd
Casa Grande, Arizona 85222

DMJM HARRIS | AECOM

GEOMETRIC LAYOUT

Registered Professional Engineer (Civil)
CERTIFICATE NO. 23987
EDITH GRIFFITH METTEY
Date Signed 1-7-07

NO.	DESCRIPTION OF REVISION	MADE BY	DATE

PROJECT NAME
DOWNTOWN STREETS - PHASE I

DWG NO. G-4.1
Sheet No.
11 of 93

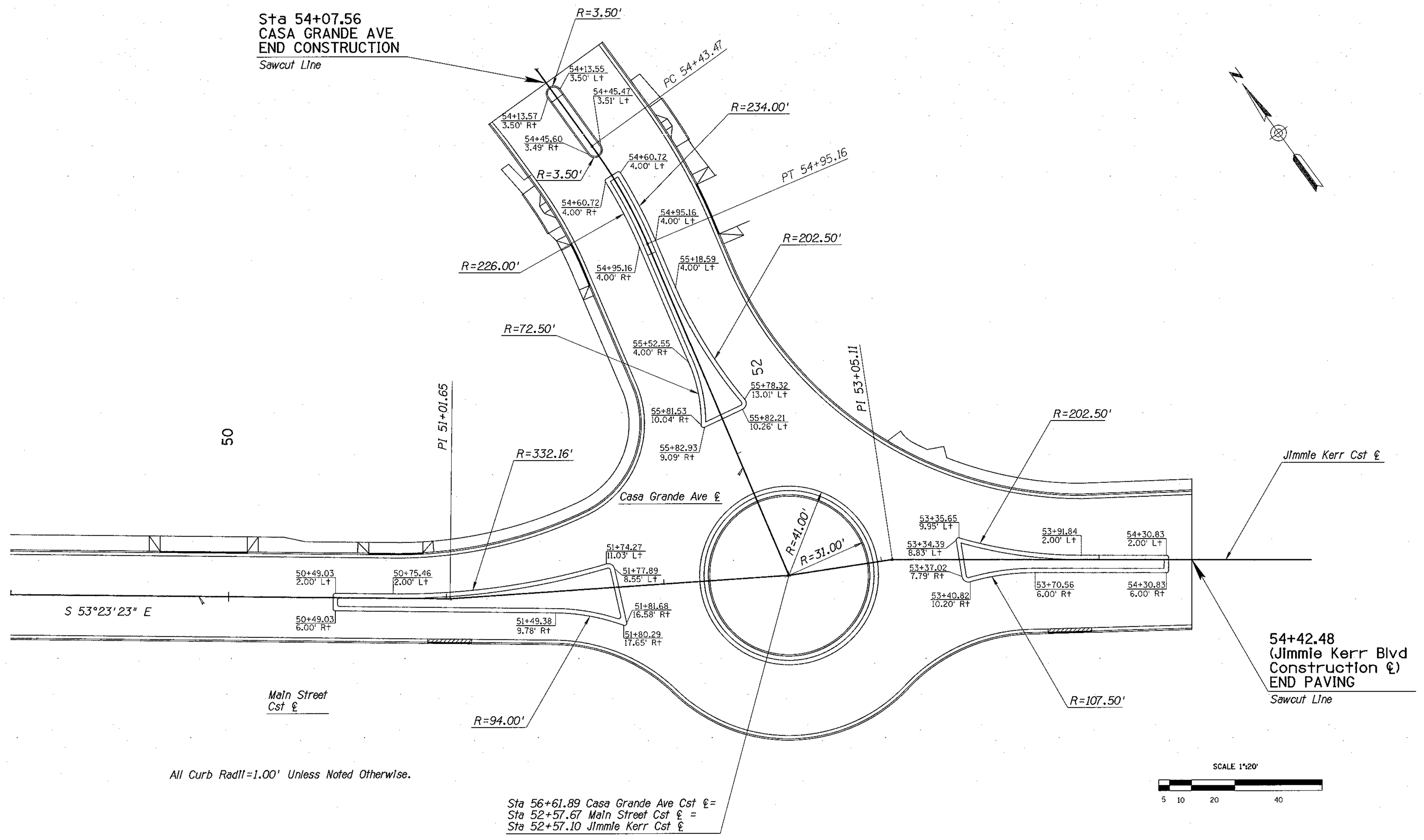

Two working days before you dig.
CALL FOR THE BLUE STAKES
1-800-782-5348
Blue Stake Center

NO.	DESCRIPTION OF REVISION	MADE BY	DATE

	NAME	DATE
DESIGN	SMM, EGM	02/07
DRAWN	WBE, SC	02/07
CHECKED	SCB, WDS	02/07

DMJM HARRIS | AECOM

City of Casa Grande
510 East Florence Blvd
Casa Grande, Arizona 85222

GEOMETRIC LAYOUT
ROUNDABOUT MEDIANS

Registered Professional Engineer (Civil)
CERTIFICATE NO. 23987
EDITH GRIFFITH METTEY
Date Signed 4-11-07

PROJECT NAME
DOWNTOWN STREETS - PHASE I

DWG NO. G-4.2
Sheet No.
12 of 93

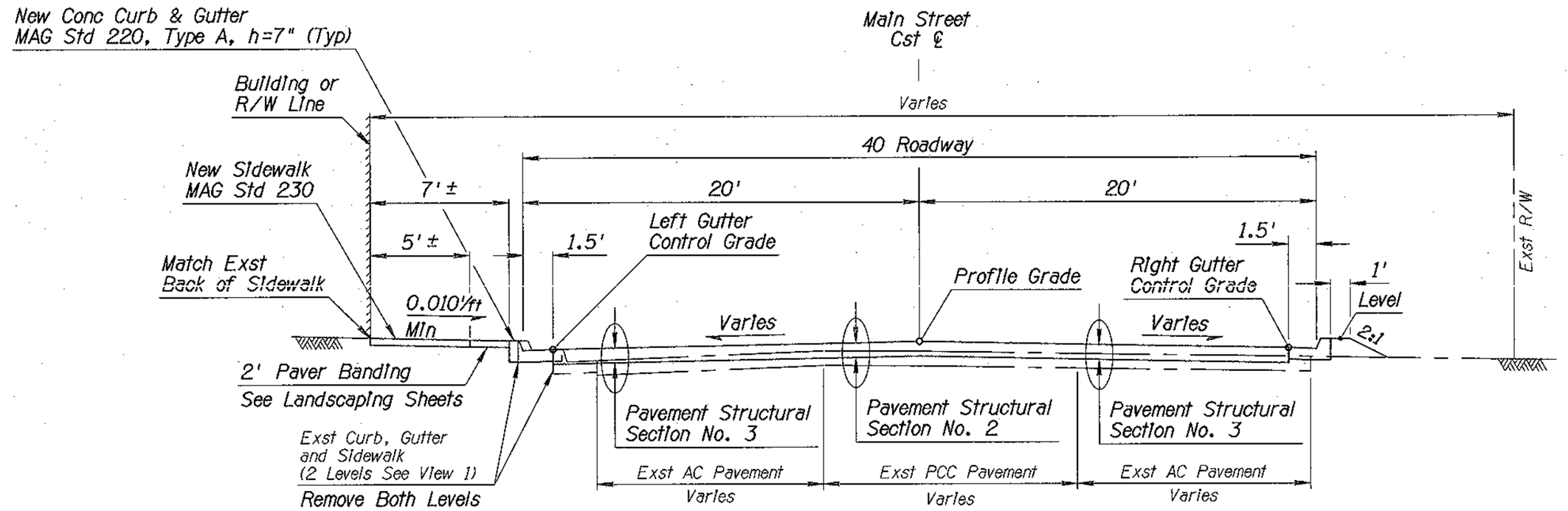

TYPICAL SECTION

Main Street
Sta 23+70.20 to Sta 33+25.61

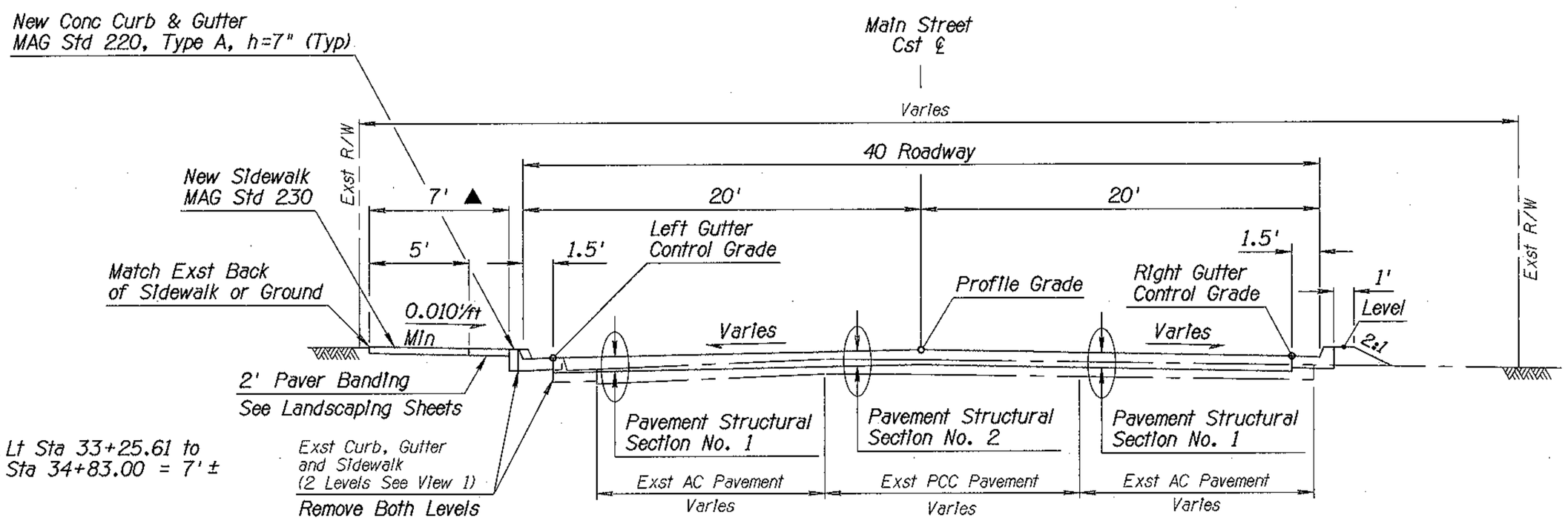

TYPICAL SECTION

Main Street
Sta 33+25.61 to Sta 50+48.03

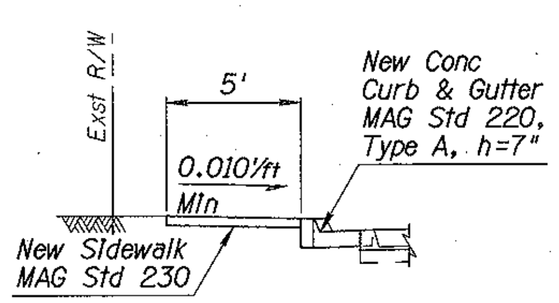

Lt Sta 50+25.00 to Sta 51+90.57
(Main Street ℄)

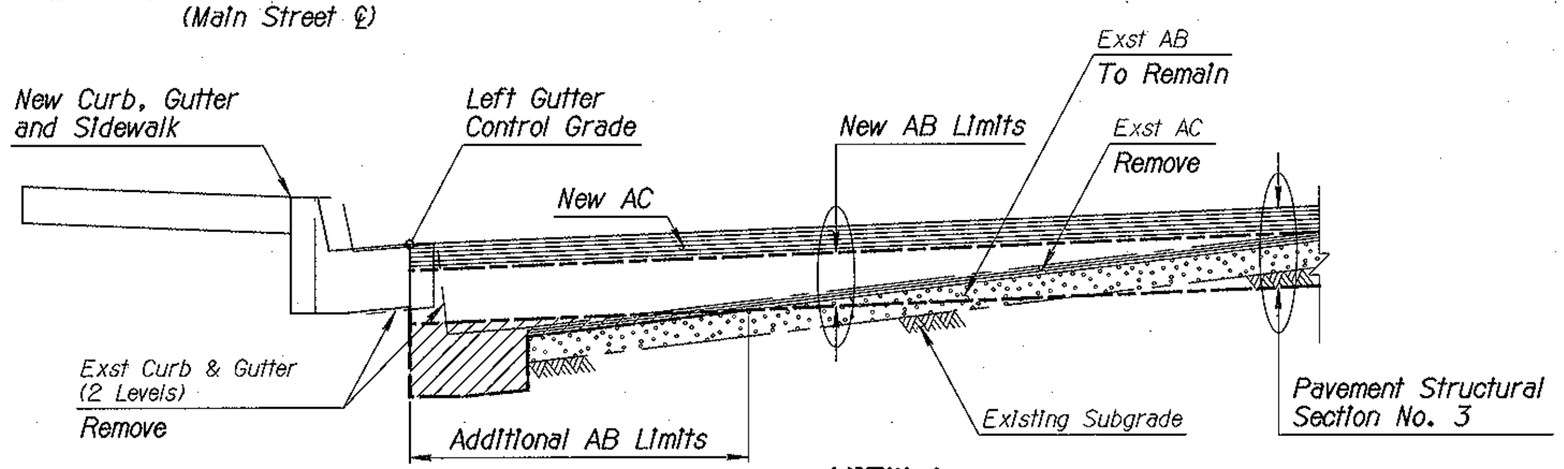

VIEW 1

Pavement Treatment

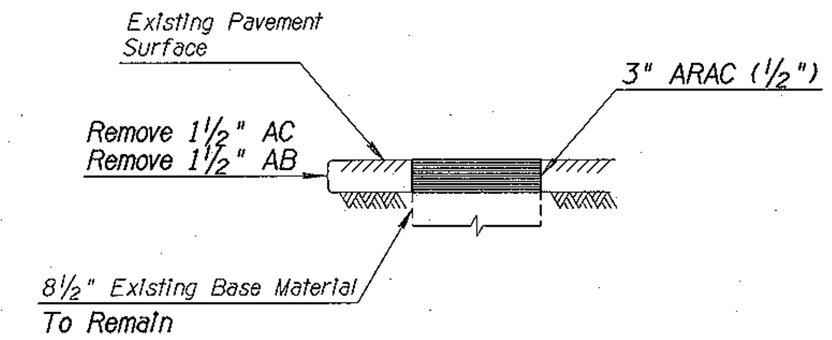

Total Thickness = 3"

SECTION NO. 1

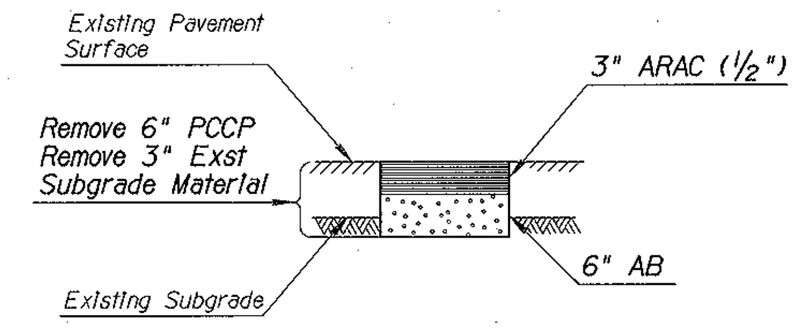

Total Thickness = 9"

SECTION NO. 2

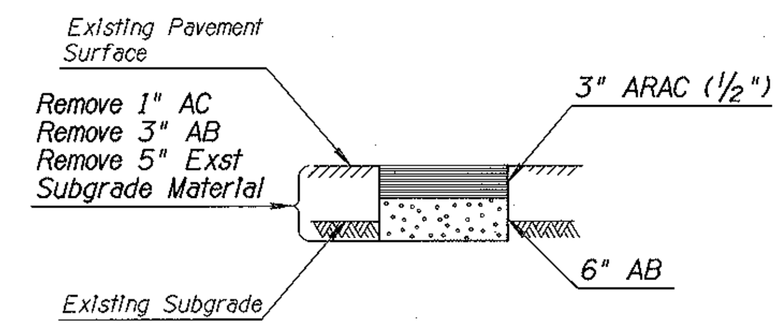

Total Thickness = 9"

SECTION NO. 3

PAVEMENT STRUCTURAL SECTIONS

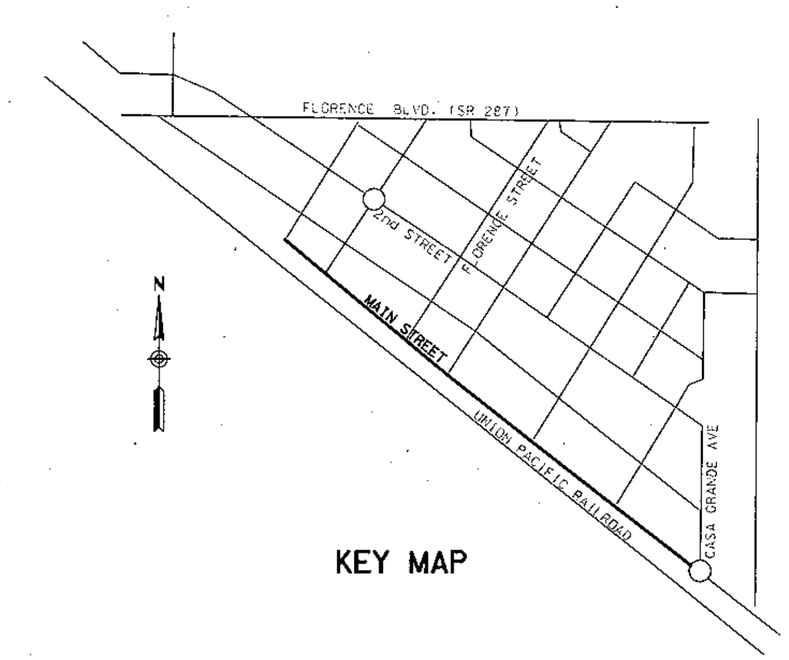

KEY MAP

Two working days before you dig.
CALL FOR THE BLUE STAKES
1-800-782-5348
Blue Stake Center

NO.	DESCRIPTION OF REVISION	MADE BY	DATE

	NAME	DATE
DESIGN	SMM, EGM	02/07
DRAWN	WBE, SC	02/07
CHECKED	SCB, WDS	02/07

City of Casa Grande
510 East Florence Blvd
Casa Grande, Arizona 85222

DMJM HARRIS | AECOM

TYPICAL SECTION
MAIN STREET
STA 23+70.20 TO STA 51+00.43

Registered Professional Engineer (Civil)
CERTIFICATE NO. 23987
EDITH GRIFFITH METTEY
Date Signed 2-7-07

DWG NO. C-1.1

PROJECT NAME
DOWNTOWN STREETS - PHASE I

Sheet No.
13 of 93

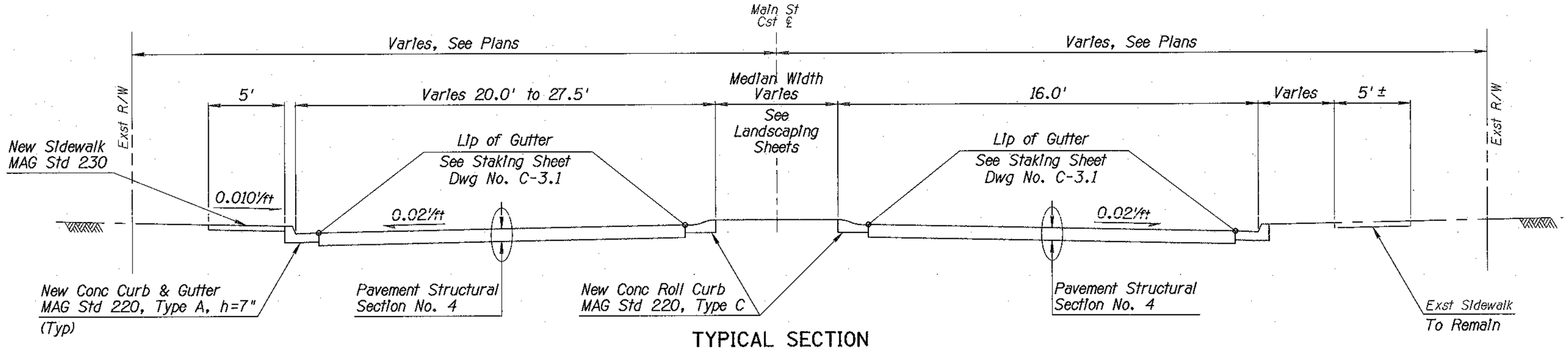

TYPICAL SECTION

Main Street
Sta 50+48.03 to Sta 51+79.18

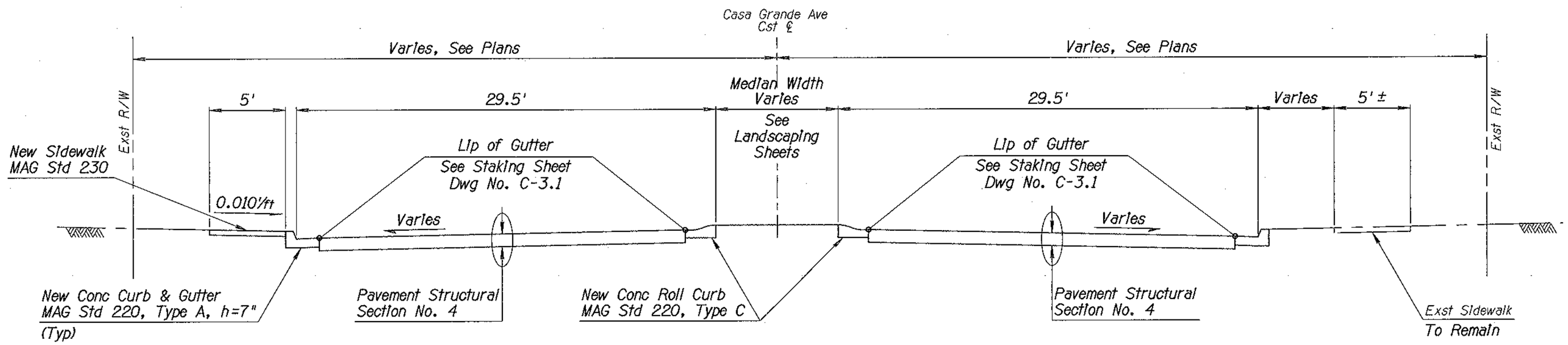

TYPICAL SECTION

Casa Grande Avenue
Sta 54+07.56 to Sta 55+82.59

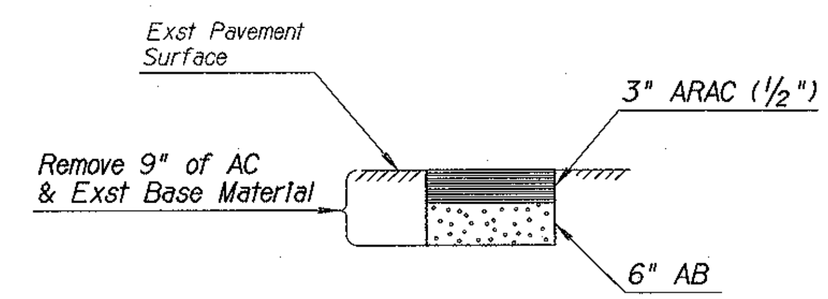

Total Thickness = 9"

PAVEMENT STRUCTURAL SECTION NO. 4

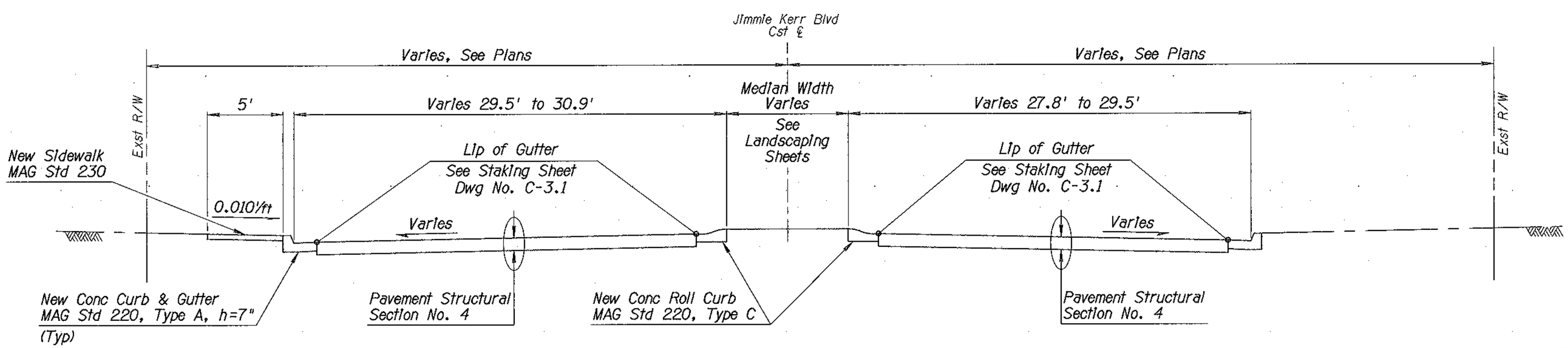

TYPICAL SECTION

Jimmie Kerr Blvd
Sta 53+35.79 to Sta 54+42.48

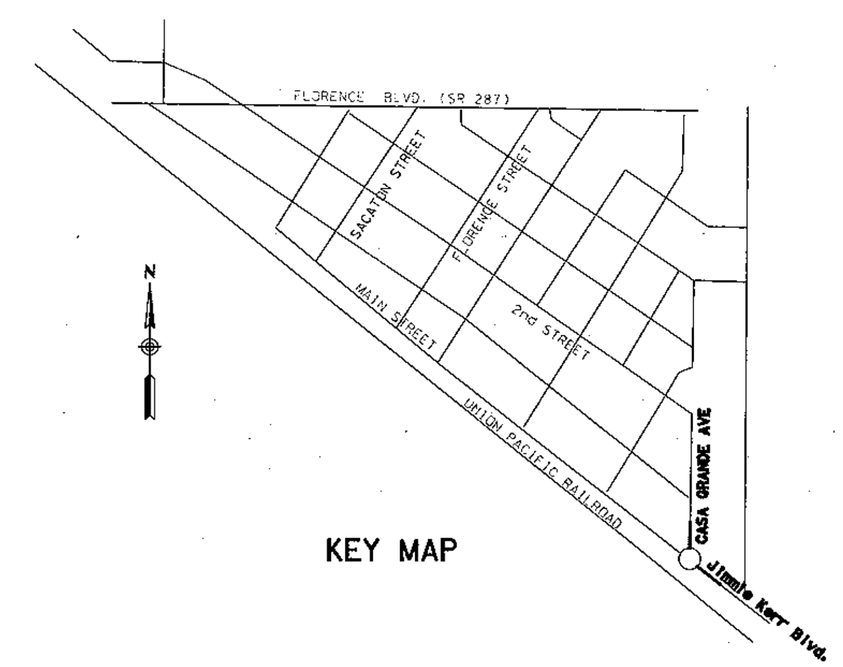

KEY MAP

Two working days before you dig.
CALL FOR THE BLUE STAKES
1-800-782-5348
Blue Stake Center

NO.	DESCRIPTION OF REVISION	MADE BY	DATE

	NAME	DATE
DESIGN	SMM, EGM	02/07
DRAWN	WBE, SC	02/07
CHECKED	SCB, WDS	02/07

City of Casa Grande
510 East Florence Blvd
Casa Grande, Arizona 85222

DMJM HARRIS | AECOM

TYPICAL SECTION
CASA GRAND AVE &
JIMMIE KERR BLVD

Registered Professional Engineer (Civil)
CERTIFICATE NO. 23987
EDITH GRIFFITH METTEY
1-7-07
Date Signed

DWG NO. C-3.2

PROJECT NAME
DOWNTOWN STREETS - PHASE I

Sheet No.
14 of 93

NOTE:
See Dwg C-2.2
for Sacaton Street Improvements

STA 14+06.41 Sacaton Street Cst ℄=
STA 23+70.20 Main Street Cst ℄

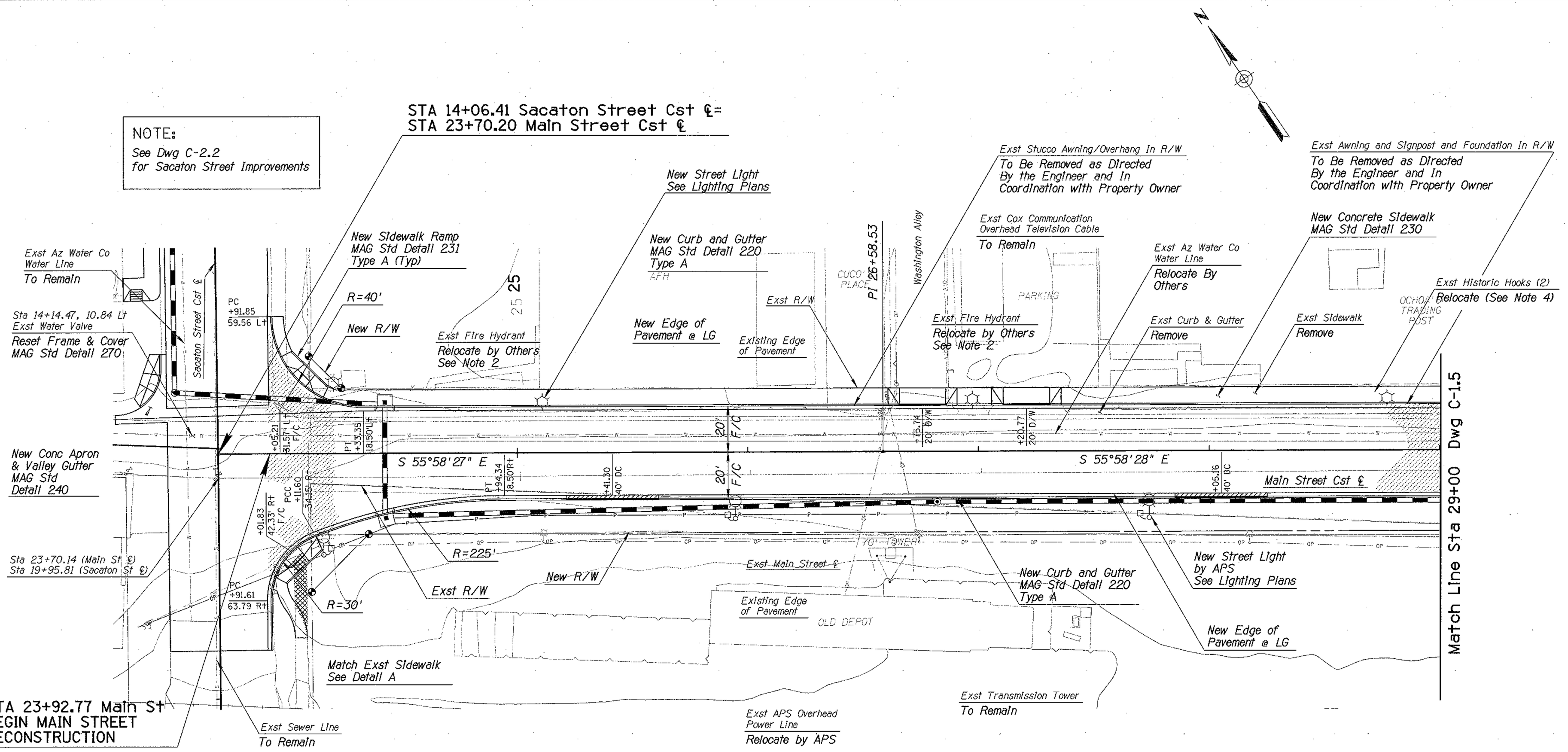

LIST OF QUANTITIES

2,984	Sq Yd Pavement Removal
2,183	Sq Yd New Pavement
4,791	Sf Sidewalk/Driveway Removal
398	Sf New Driveway
3	EA New Sidewalk Ramp, Type A
3,130	Sf New Sidewalk
1,029	Lf Exst Curb and Gutter Removal
1,077	Lf New Curb and Gutter
91	Sq Yd Concrete Apron & Valley Gutter
1	Ea Valve-Reset Valve and Cover

NOTES:

1. All Curb, Gutter & Pavement Control Points are Dimensioned to Lip of Gutter Unless Otherwise Shown.
2. See Separate Water Modification Plans Prepared by Arizona Water Company for Modifications to Existing Water System.
3. See MAG Std Dtl 250 for New Driveway Construction Details
4. Historic Hooks to be removed, salvaged, and relocated to a location designated by the Engineer. Payment for removal is incidental to sidewalk removal.

SCALE 1":20'
5 10 20 40

Two working days before you dig.
CALL FOR THE BLUE STAKES
1-800-782-5348
Blue Stake Center

NO.	DESCRIPTION OF REVISION	MADE BY	DATE

	NAME	DATE
DESIGN	SMM, EGM	02/07
DRAWN	WBE, SC	02/07
CHECKED	SCB, WDS	02/07

City of Casa Grande
510 East Florence Blvd
Casa Grande, Arizona 85222

DMJM HARRIS | AECOM

PLAN SHEET
MAIN STREET
STA 23+70.20 TO STA 29+00

PROJECT NAME
DOWNTOWN STREETS - PHASE I

Registered Professional Engineer (Civil)
CERTIFICATE NO. 23987
EDITH GRIFFITH METTEY
Date Signed 12-10-07

DWG NO. C-1.3
Sheet No.
15 of 93

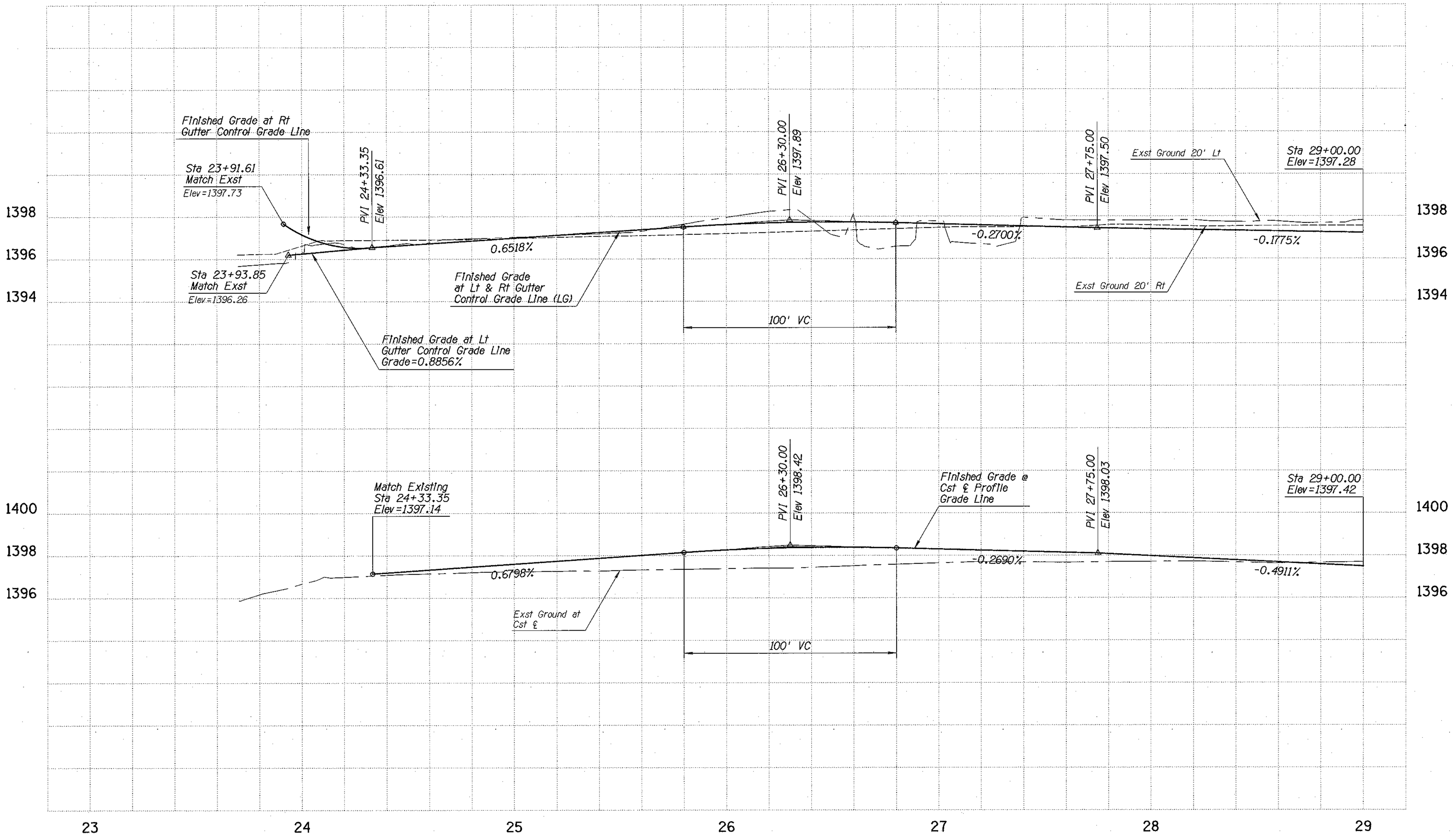

Two working days before you dig.
CALL FOR THE BLUE STAKES
1-800-782-5348
Blue Stake Center

NO.	DESCRIPTION OF REVISION	MADE BY	DATE

	NAME	DATE
DESIGN	SMM, EGM	02/07
DRAWN	WBE, SC	02/07
CHECKED	SCB, WDS	02/07

City of Casa Grande
510 East Florence Blvd
Casa Grande, Arizona 85222

DMJM HARRIS | AECOM

MAIN STREET PROFILE SHEET
STA 23+70.14 to STA 29+00

PROJECT NAME
DOWNTOWN STREETS - PHASE I

Registered Professional Engineer (Civil)
CERTIFICATE NO. 23987
EDITH GRIFFITH METTEY
Date Signed 2-7-07

DWG NO. C-1.4
Sheet No.
16 of 93

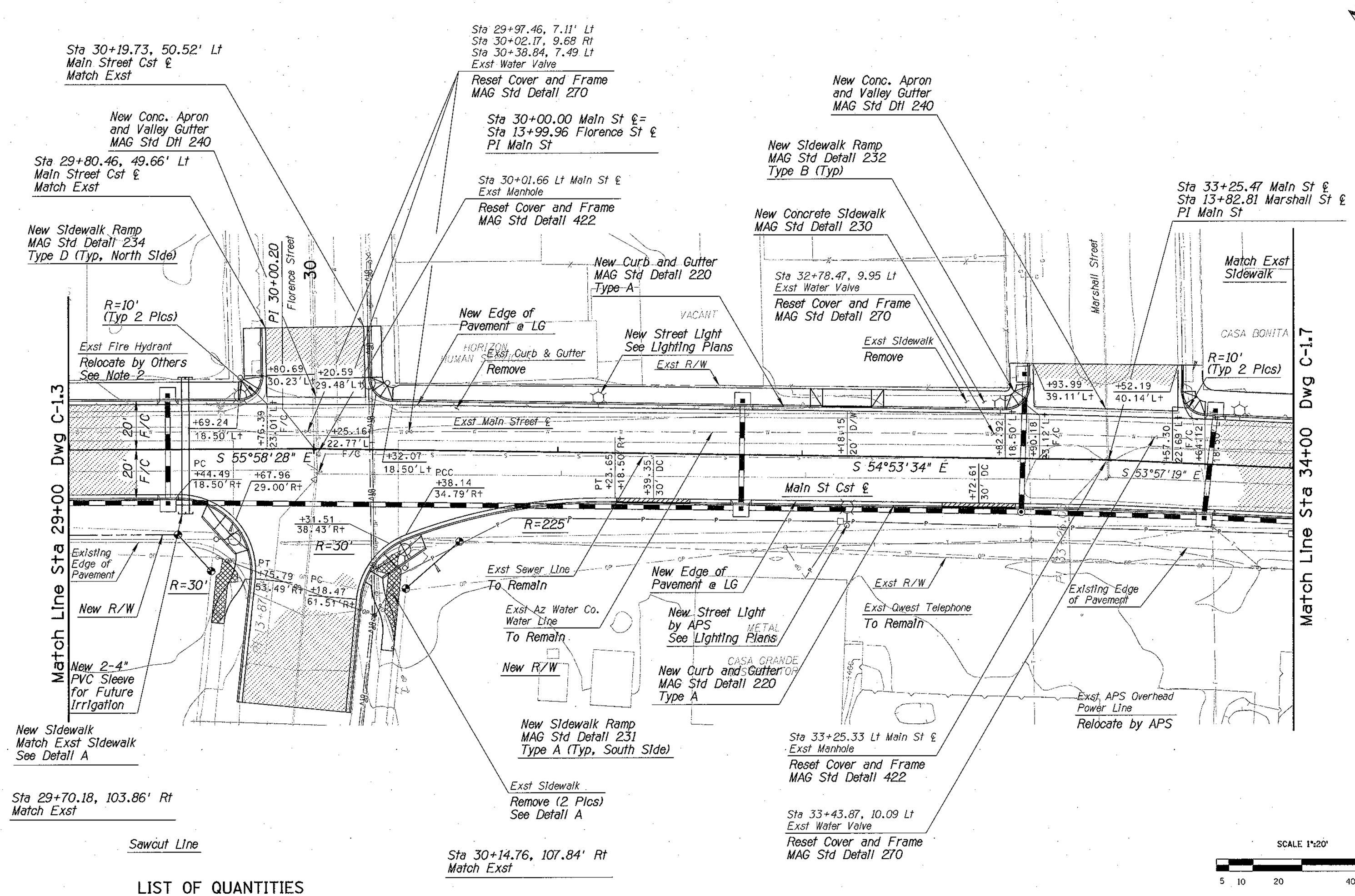

LIST OF QUANTITIES

3,652 Sq Yd Pavement Removal
2,842 Sq Yd New Pavement
3,449 Sf Sidewalk/Driveway Removal
227 Sf New Driveway
2 EA New Sidewalk Ramp, Type A
4 EA New Sidewalk Ramp, Type D
3,075 Sf New Sidewalk
833 Lf Exst Curb and Gutter Removal
1,068 Lf New Curb and Gutter
2 EA Manhole-Reset Frame and Cover
5 EA Valve-Reset Frame and Cover
57 Sq Yd Concrete Apron & Valley Gutter
Lf 4" PVC Sleeve

NOTES:

1. All Curb, Gutter & Pavement Control Points are Dimensioned to Lip of Gutter Unless Otherwise Shown.
2. See Separate Water Modification Plans Prepared by Arizona Water Company for Modifications to Existing Water System.
3. See MAG Std Dtl 250 for New Driveway Construction Details

Two working days before you dig.
CALL FOR THE BLUE STAKES
1-800-782-5348
Blue Stake Center

NO.	DESCRIPTION OF REVISION	MADE BY	DATE

	NAME	DATE
DESIGN	SMM, EGM	02/07
DRAWN	WBE, SC	02/07
CHECKED	SCB, WDS	02/07

City of Casa Grande
510 East Florence Blvd
Casa Grande, Arizona 85222

DMJM HARRIS | AECOM

PLAN SHEET
MAIN STREET
STA 29+00 TO STA 34+00

Registered Professional Engineer (Civil)
CERTIFICATE NO. 23987
EDITH GRIFFITH METTEY
Date Signed 2-7-07
Revised 3-5-07

PROJECT NAME
DOWNTOWN STREETS - PHASE I

DWG NO. 3-4.5
Sheet No.
17 of 93

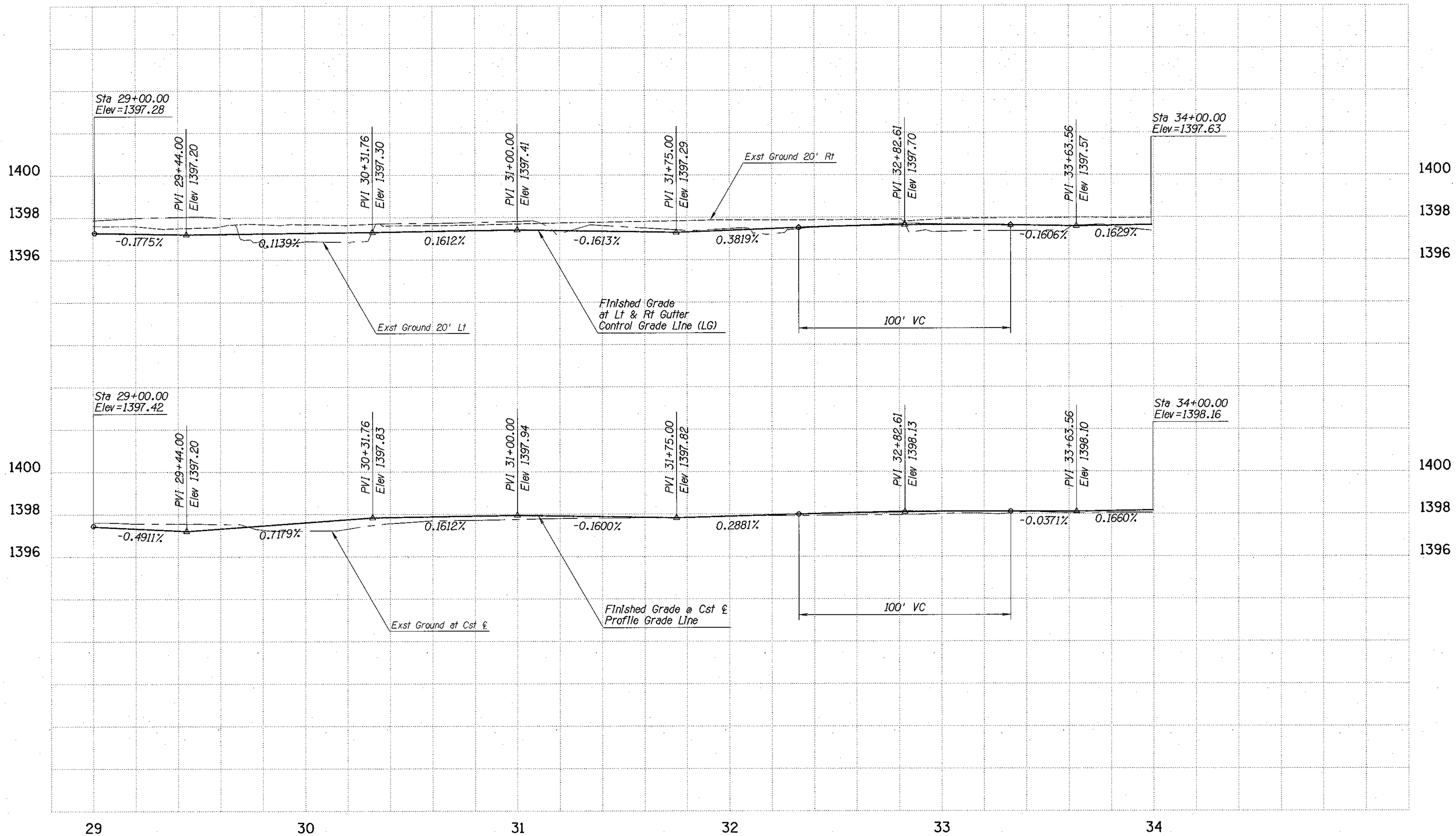

Two working days before you dig.
CALL FOR THE BLUE STAKES
1-800-782-5348
Blue Stake Center

NO.	DESCRIPTION OF REVISION	MADE BY	DATE

	NAME	DATE
DESIGN	SMM, EGM	02/07
DRAWN	WBE, SC	02/07
CHECKED	SCB, WDS	02/07

City of Casa Grande
510 East Florence Blvd
Casa Grande, Arizona 85222

DMJM HARRIS | AECOM

MAIN STREET PROFILE SHEET
STA 29+00 to STA 34+00

PROJECT NAME
DOWNTOWN STREETS - PHASE I

Registered Professional Engineer (Civil)
CERTIFICATE NO. 23987
EDITH GRIFFITH METTEY
Date Signed 2-7-07

DWG NO. C-1.6
Sheet No.
18 of 93

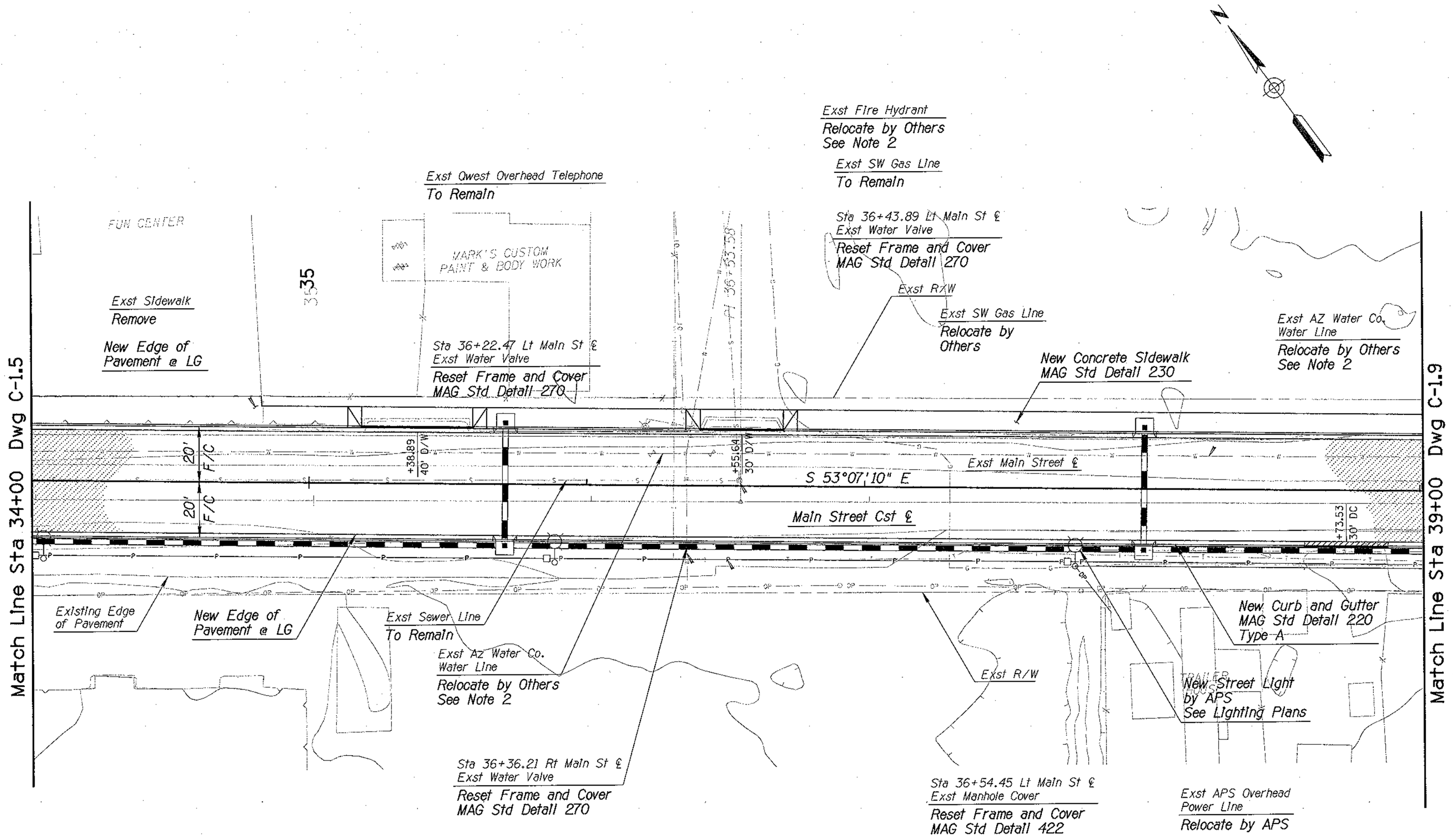

LIST OF QUANTITIES

2,554 Sq Yd Pavement Removal
2,056 Sy Yd New Pavement
1,190 Sf Sidewalk/Driveway Removal
630 Sf New Driveway
3,134 Sf New Sidewalk
1,000 Lf Exst Curb and Gutter Removal
1000 Lf New Curb and Gutter
1 EA Manhole-Reset Frame and Cover
3 EA Valve-Reset Frame and Cover

Exst Qwest Telephone
To Remain

Exst Az Water Co.
Water Line
Relocate by
Others

SCALE 1":20'
5 10 20 40

NOTES:

1. All Curb, Gutter & Pavement Control Points are Dimensioned to Lip of Gutter Unless Otherwise Shown.
2. See Separate Water Modification Plans Prepared by Arizona Water Company for Modifications to Existing Water System.
3. See MAG Std Dtl 250 for New Driveway Construction Details

Two working days before you dig.
CALL FOR THE BLUE STAKES
1-800-782-5348
Blue Stake Center

NO.	DESCRIPTION OF REVISION	MADE BY	DATE

	NAME	DATE
DESIGN	SMM, EGM	02/07
DRAWN	WBE, SC	02/07
CHECKED	SCB, WDS	02/07

DMJM HARRIS | AECOM

City of Casa Grande
510 East Florence Blvd
Casa Grande, Arizona 85222

PLAN SHEET
MAIN STREET
STA 34+00 TO STA 39+00

Registered Professional Engineer (Civil)
CERTIFICATE NO. 23987
EDITH GRIFFITH METTEY
Date Signed 4-11-07

PROJECT NAME
DOWNTOWN STREETS - PHASE I

DWG NO. C-1.7
Sheet No.
19 of 93

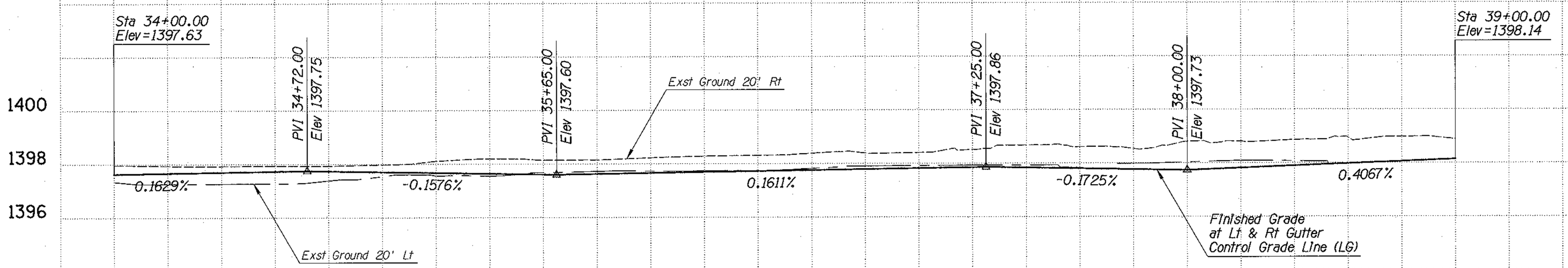

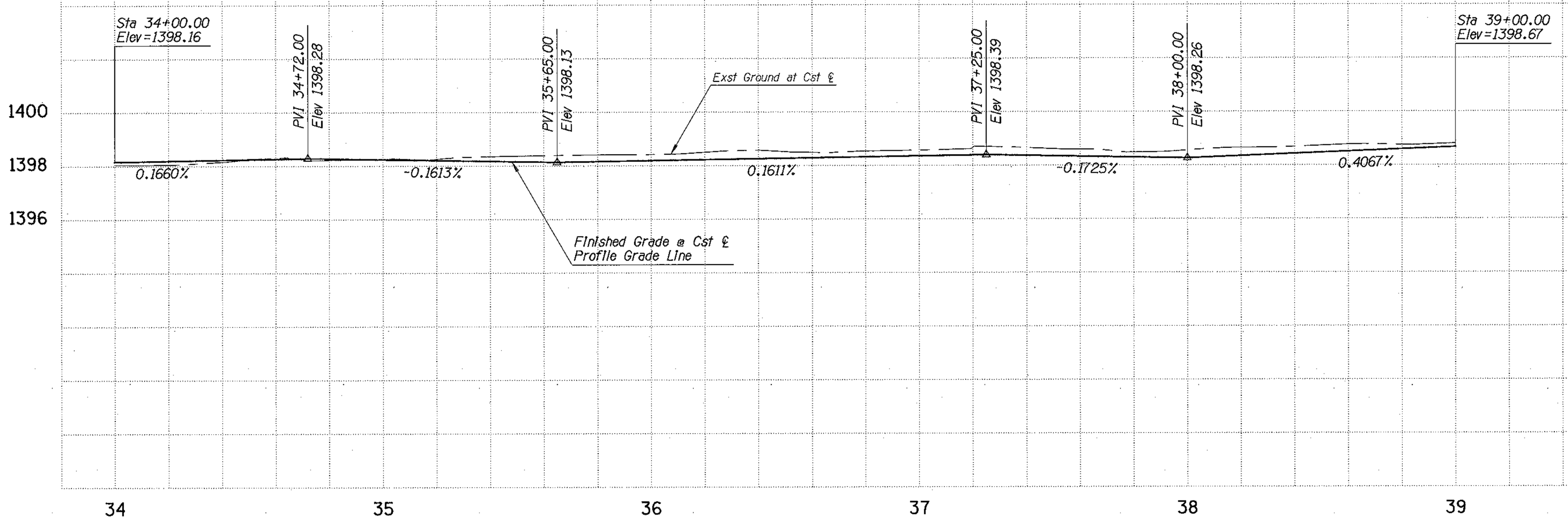

Two working days before you dig.
CALL FOR THE BLUE STAKES
1-800-782-5348
Blue Stake Center

NO.	DESCRIPTION OF REVISION	MADE BY	DATE

	NAME	DATE
DESIGN	SMM, EGM	02/07
DRAWN	WBE, SC	02/07
CHECKED	SCB, WDS	02/07

City of Casa Grande
510 East Florence Blvd
Casa Grande, Arizona 85222

DMJM HARRIS | AECOM

MAIN STREET PROFILE SHEET
STA 34+00 to STA 39+00

PROJECT NAME
DOWNTOWN STREETS - PHASE I

Registered Professional Engineer (Civil)
CERTIFICATE NO. 23987
EDITH GRIFFITH METTEY
Date Signed 2-15-07
Arizona U.S.A.

DWG NO. C-1.8
Sheet No.
20 of 93

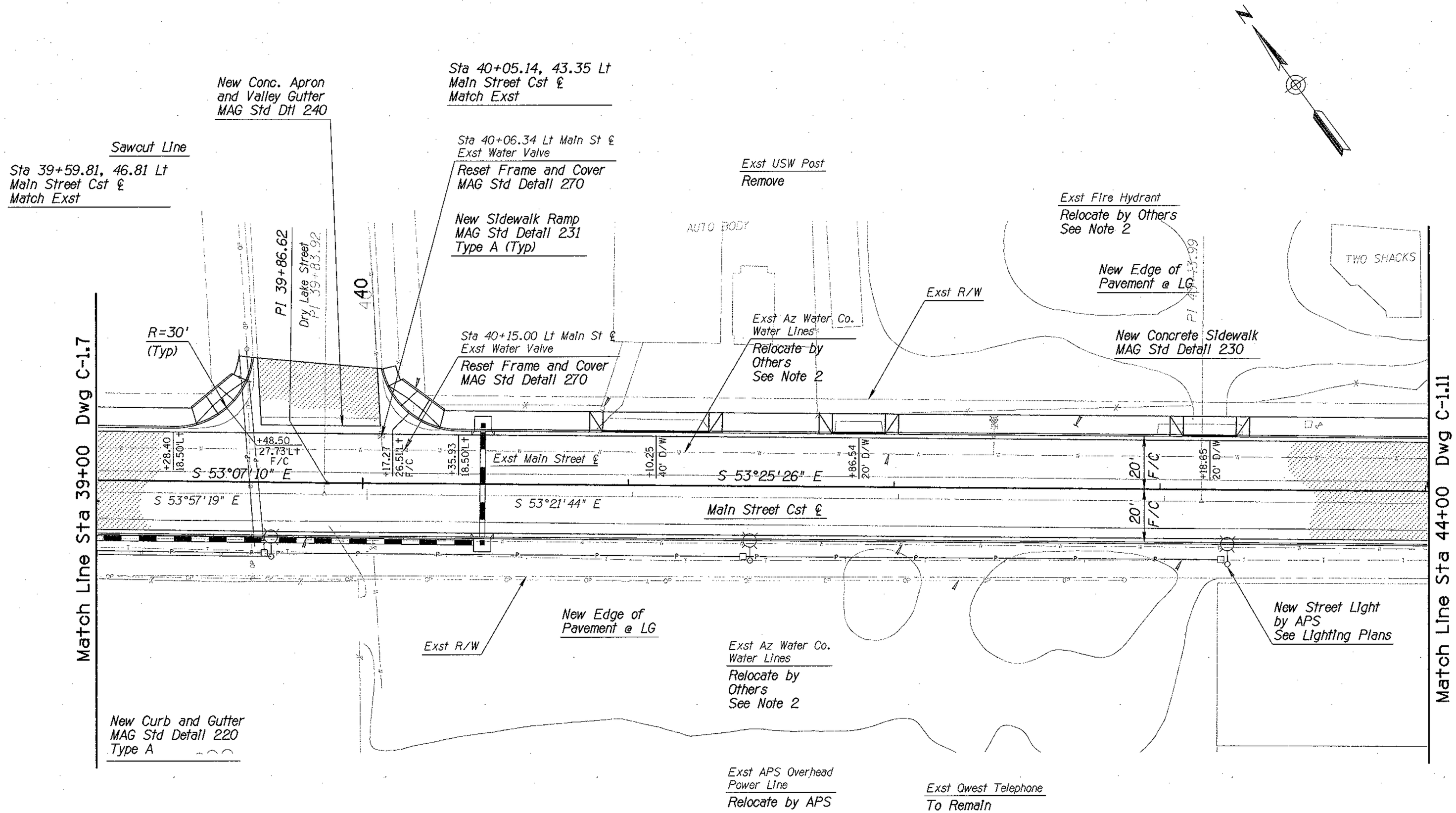

LIST OF QUANTITIES

2,055 Sq Yd Pavement Removal
2,174 Sq Yd New Pavement
771 Sf New Driveway
429 Sf Sidewalk/Driveway Removal
2 EA New Sidewalk Ramp, Type A
2,144 Sf New Sidewalk
897 Lf Exst Curb and Gutter Removal
976 Lf New Curb and Gutter
75 Sq Yd Concrete Apron and Valley Gutter
2 Ea Valve-Reset Frame and Cover

NOTES:

1. All Curb, Gutter & Pavement Control Points are Dimensioned to Lip of Gutter Unless Otherwise Shown.
2. See Separate Water Modification Plans Prepared by Arizona Water Company for Modifications to Existing Water System.
3. See MAG Std Dtl 250 for New Driveway Construction Details.

SCALE 1"=20'

5 10 20 40

Two working days before you dig.
CALL FOR THE BLUE STAKES
1-800-782-5348
Blue Stake Center

NO.	DESCRIPTION OF REVISION	MADE BY	DATE

	NAME	DATE
DESIGN	SMM, EGM	02/07
DRAWN	WBE, SC	02/07
CHECKED	SCB, WDS	02/07

City of Casa Grande
510 East Florence Blvd
Casa Grande, Arizona 85222

DMJM HARRIS | AECOM

PLAN SHEET
MAIN STREET
STA 39+00 TO STA 44+00

PROJECT NAME
DOWNTOWN STREETS - PHASE I

Registered Professional Engineer (Civil)
CERTIFICATE NO. 23987
EDITH GRIFFITH METTEY
Date Signed 7-7-07

DWG NO. C-1.9
Sheet No.
21 of 93

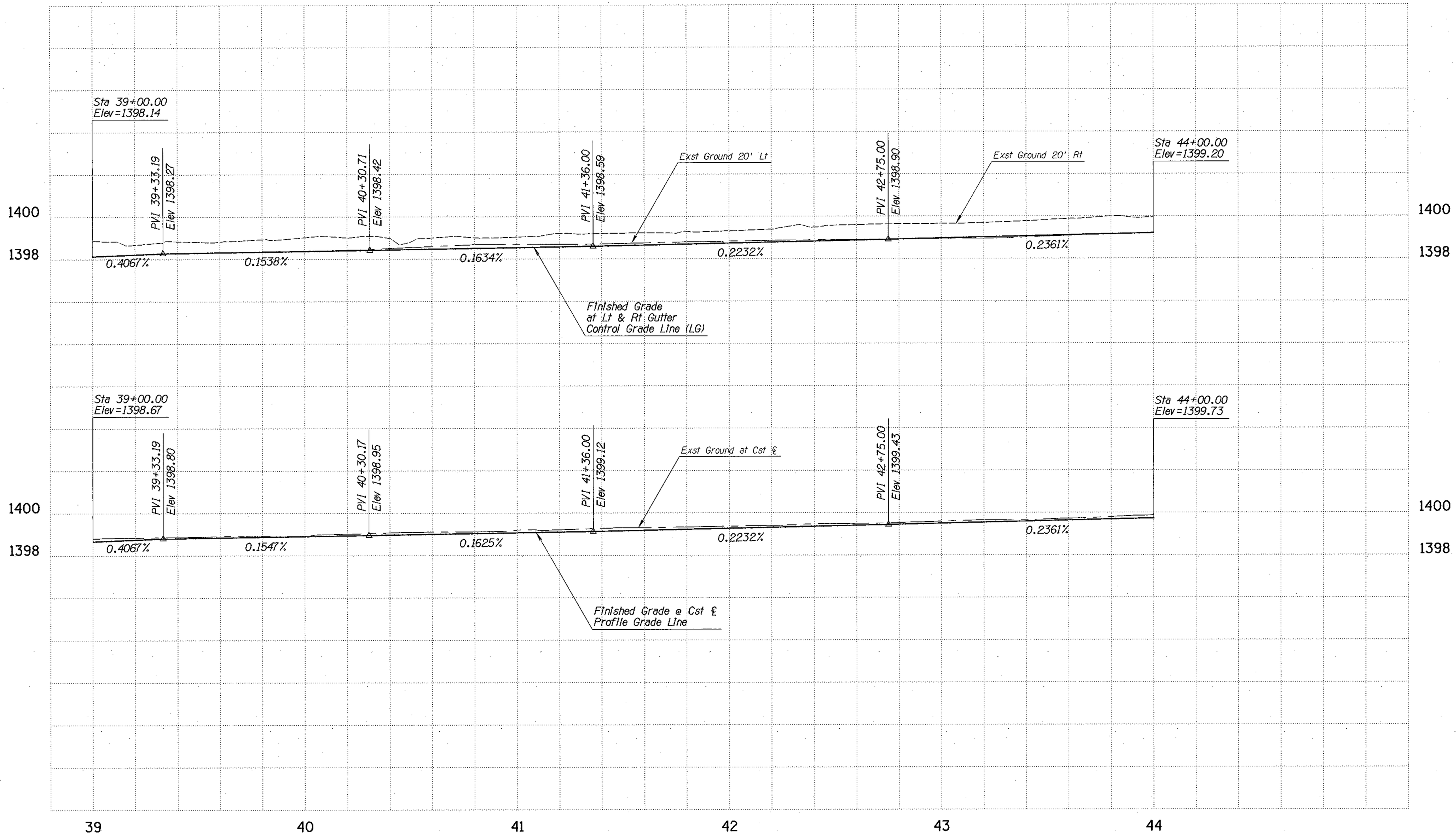

Two working days before you dig.
CALL FOR THE BLUE STAKES
1-800-782-5348
Blue Stake Center

NO.	DESCRIPTION OF REVISION	MADE BY	DATE

	NAME	DATE
DESIGN	SMM, EGM	02/07
DRAWN	WBE, SC	02/07
CHECKED	SCB, WDS	02/07

DMJM HARRIS | AECOM

City of Casa Grande
510 East Florence Blvd
Casa Grande, Arizona 85222

MAIN STREET PROFILE SHEET
STA 39+00 to STA 44+00

PROJECT NAME
DOWNTOWN STREETS - PHASE I

Registered Professional Engineer (Civil)
CERTIFICATE NO. 23987
EDITH GRIFFITH METTEY
Date Signed 2-7-07

DWG NO. C-4.10
Sheet No.
22 of 93

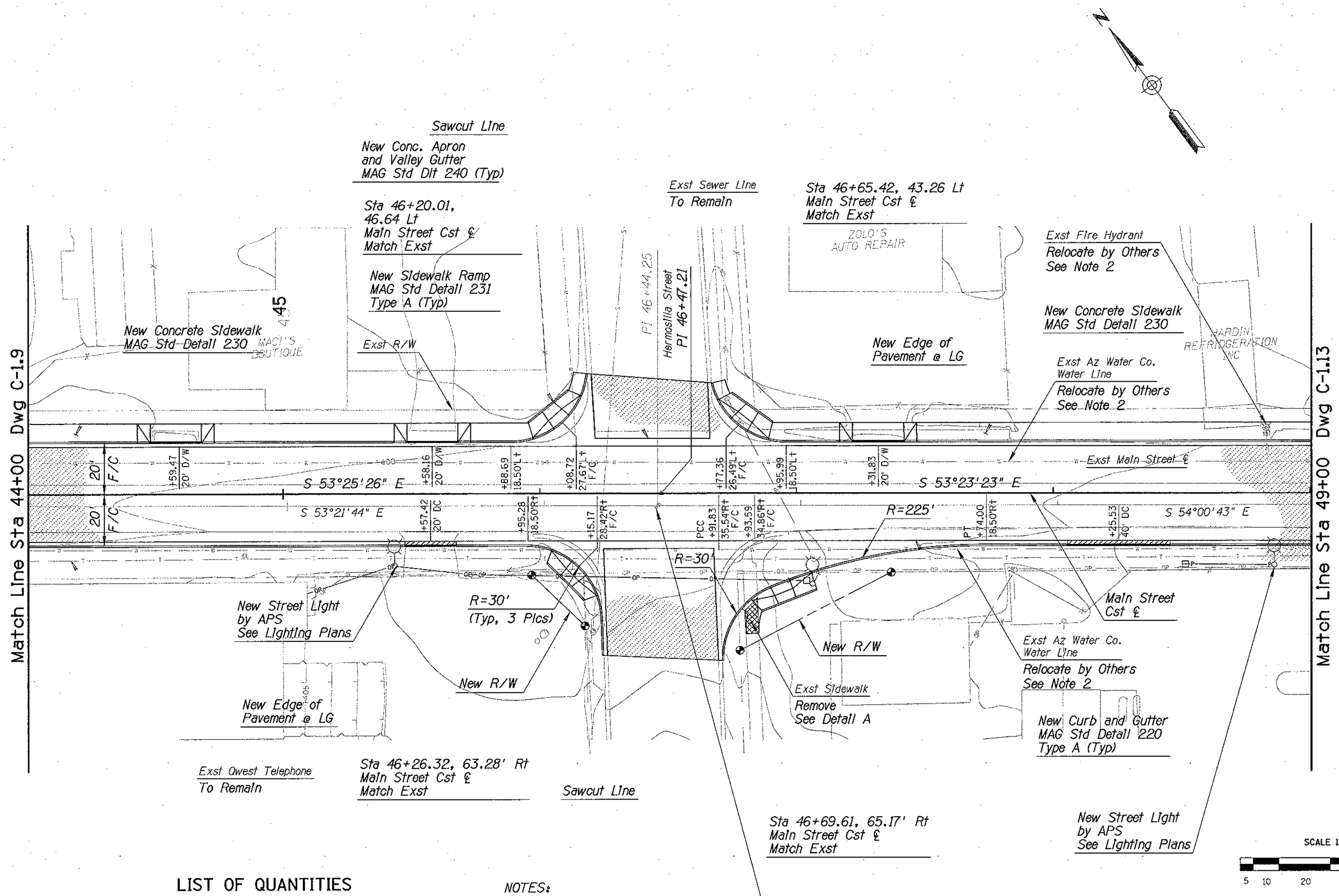

LIST OF QUANTITIES

2,341 Sq Yd Exst Pavement Removal
2,377 Sq Yd New Pavement
824 Sf Sidewalk/Driveway Removal
630 Sf New Driveway
4 EA New Sidewalk Ramp, Type A
2,349 Sf New Sidewalk
1,027 Lf Exst Curb and Gutter Removal
978 Lf New Curb and Gutter
1 EA Valve-Reset Frame and Cover
250 Sq Yd Concrete Apron and Valley Gutter

NOTES:

1. All Curb, Gutter & Pavement Control Points are Dimensioned to Lip of Gutter Unless Otherwise Shown.
2. See Separate Water Modification Plans Prepared by Arizona Water Company for Modification to Existing Water System.
3. See MAG Std Dtl 250 for New Driveway Construction Details.

Two working days before you dig. CALL FOR THE BLUE STAKES 1-800-782-5348 Blue Stake Center

NO.	DESCRIPTION OF REVISION	MADE BY	DATE

	NAME	DATE
DESIGN	SMM, EGM	02/07
DRAWN	WBE, SC	02/07
CHECKED	SCB, WDS	02/07

DMJM HARRIS | AECOM

City of Casa Grande
510 East Florence Blvd
Casa Grande, Arizona 85222

PLAN SHEET
MAIN STREET
STA 44+00 TO STA 49+00

Registered Professional Engineer (Civil) CERTIFICATE NO. 23987 EDITH GRIFFITH METTEY Date Signed 4-7-07

PROJECT NAME
DOWNTOWN STREETS - PHASE I

DWG NO. C-4.11
Sheet No. 23 of 93

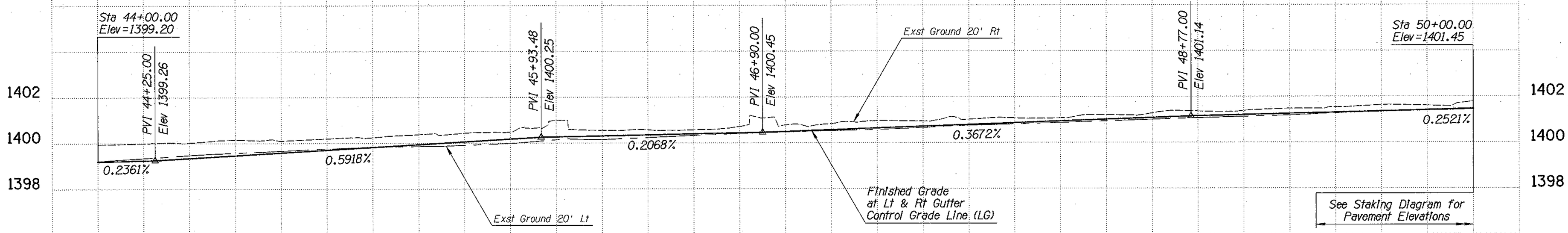

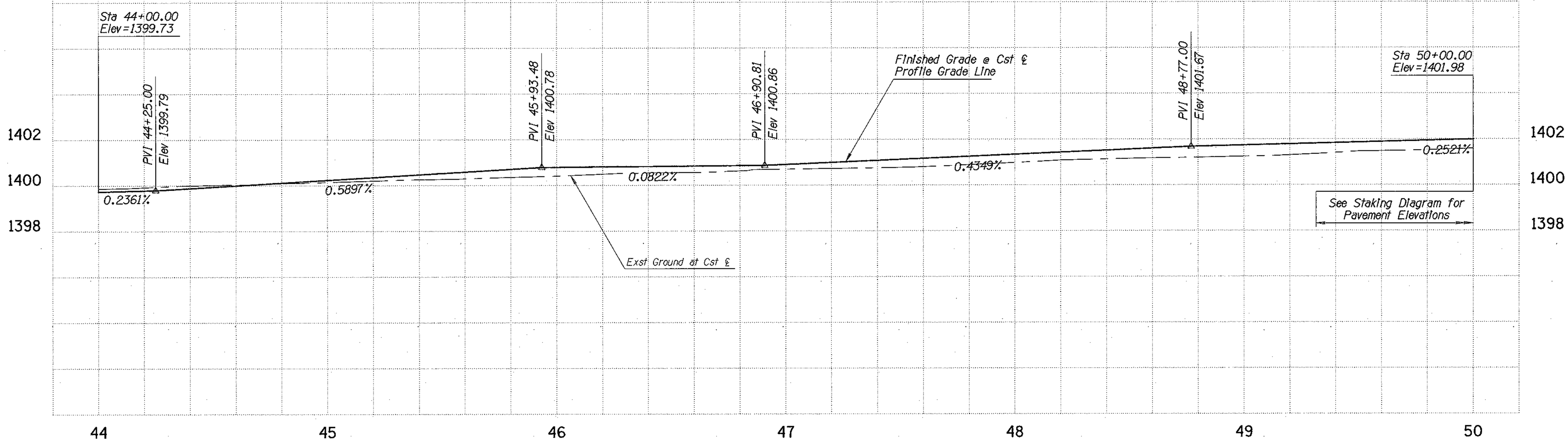

Two working days before you dig.
CALL FOR THE BLUE STAKES
1-800-782-5348
Blue Stake Center

NO.	DESCRIPTION OF REVISION	MADE BY	DATE

	NAME	DATE
DESIGN	SMM, EGM	02/07
DRAWN	WBE, SC	02/07
CHECKED	SCB, WDS	02/07

City of Casa Grande
510 East Florence Blvd
Casa Grande, Arizona 85222

DMJM HARRIS | AECOM

MAIN STREET PROFILE SHEET
STA 44+00 to STA 50+00

PROJECT NAME
DOWNTOWN STREETS - PHASE I

Registered Professional Engineer (Civil)
CERTIFICATE NO. 23987
EDITH GRIFFITH METTEY
Date Signed 2-7-07

DWG NO. C-1.12
Sheet No.
24 of 93

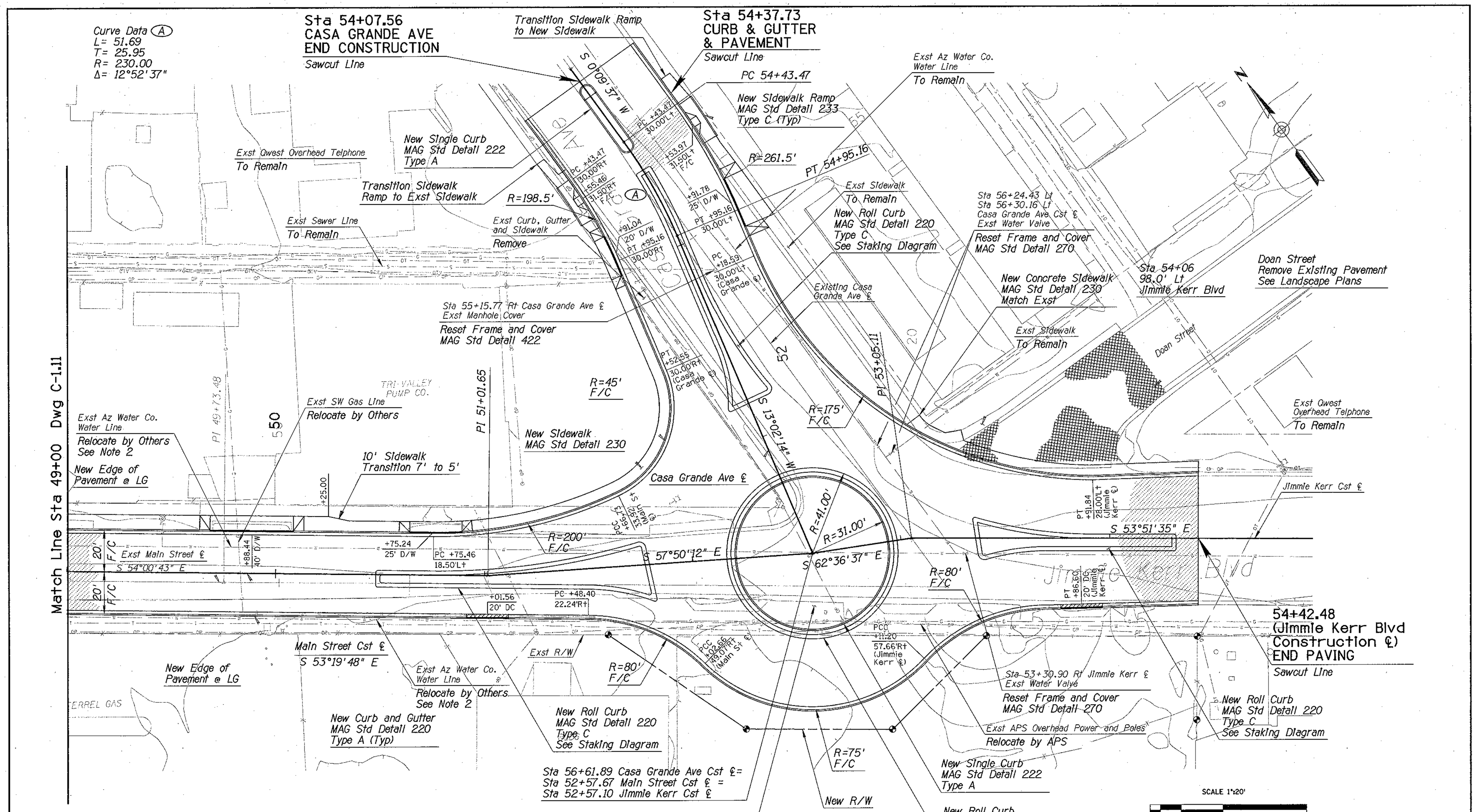

LIST OF QUANTITIES

- 4,071 Sq Yd Pavement Removal
- 5,369 Sq Yd New Pavement
- 1,011 Sf New Driveway
- 2,411 Sf New Sidewalk
- 2 EA New Sidewalk Ramp, Type C
- 1,231 Lf Exst Curb and Gutter Removal
- 1,353 Lf New Curb and Gutter
- 318 Lf New Single Curb, Type A
- 1,054 Lf New Roll Curb, Type C

NOTES:

1. All Curb, Gutter & Pavement Control Points are Dimensioned to Lip of Gutter Unless Otherwise Shown.
2. See Separate Water Modification Plans Prepared by Arizona Water Company for Modification to Existing Water System.
3. See MAG Std Dtl 250 for New Driveway Construction Details.

NOTE:
See Dwg C-3.1
for Intersection Staking Diagram

Two working days before you dig.
CALL FOR THE BLUE STAKES
1-800-782-5348
Blue Stake Center

NO.	DESCRIPTION OF REVISION	MADE BY	DATE

	NAME	DATE
DESIGN	SMM, EGM	02/07
DRAWN	WBE, SC	02/07
CHECKED	SCB, WDS	02/07

City of Casa Grande
510 East Florence Blvd
Casa Grande, Arizona 85222

DMJM HARRIS | AECOM

PLAN SHEET
MAIN STREET
STA 49+00 TO STA 53+00

PROJECT NAME
DOWNTOWN STREETS - PHASE I

Registered Professional Engineer (Civil)
CERTIFICATE NO. 23987
EDITH GRIFFITH METTEY
Date Signed 2-7-07
Arizona U.S.A.

DWG NO. C-1.13
Sheet No.
25 of 93

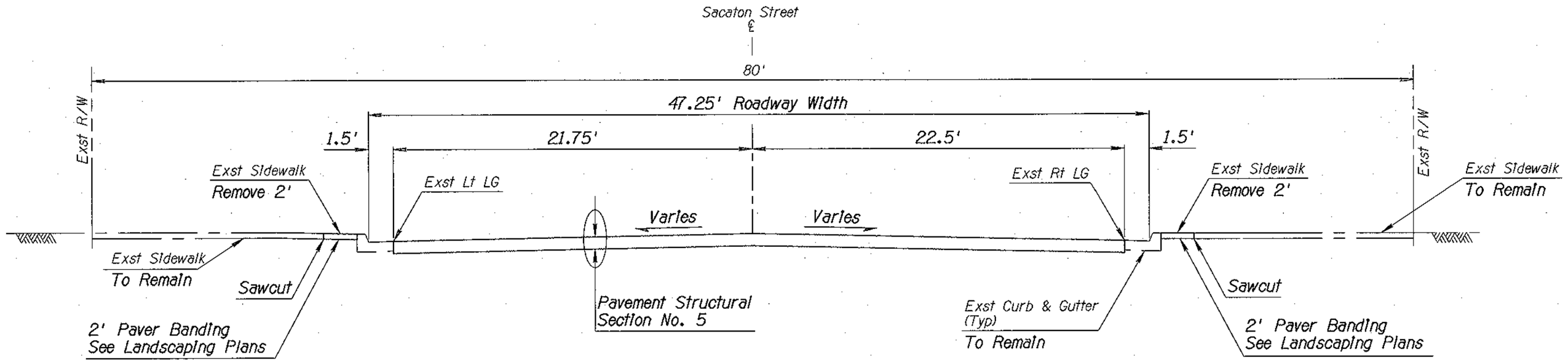

TYPICAL SECTION

Sacaton Street
Sta 13+20.93 to Sta 16+79.18

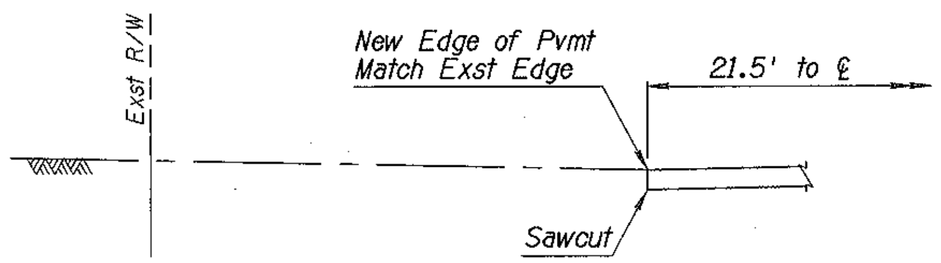

Lt Sta 13+20.94 to 13+97.37

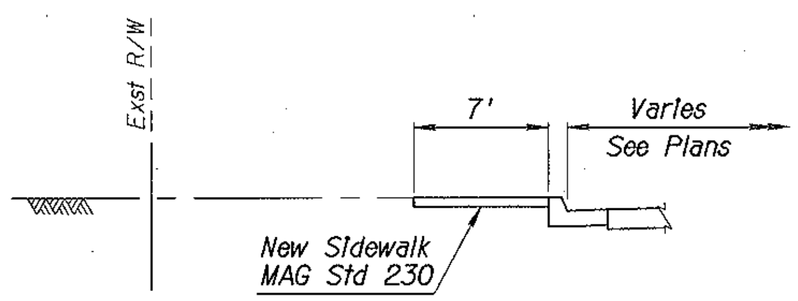

Lt Sta 14+73.16 to 15+31.68

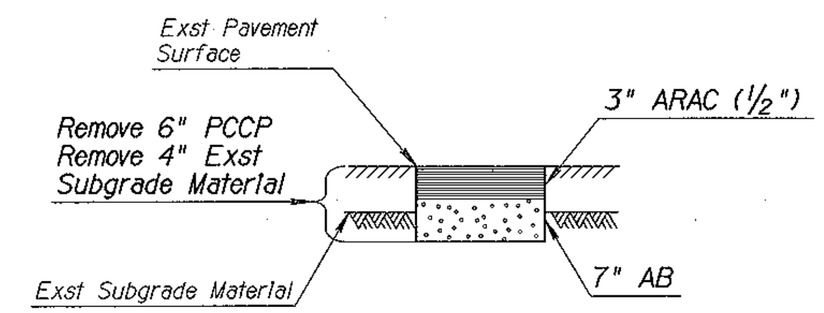

Total Thickness = 10"

PAVEMENT STRUCTURAL SECTION NO. 5

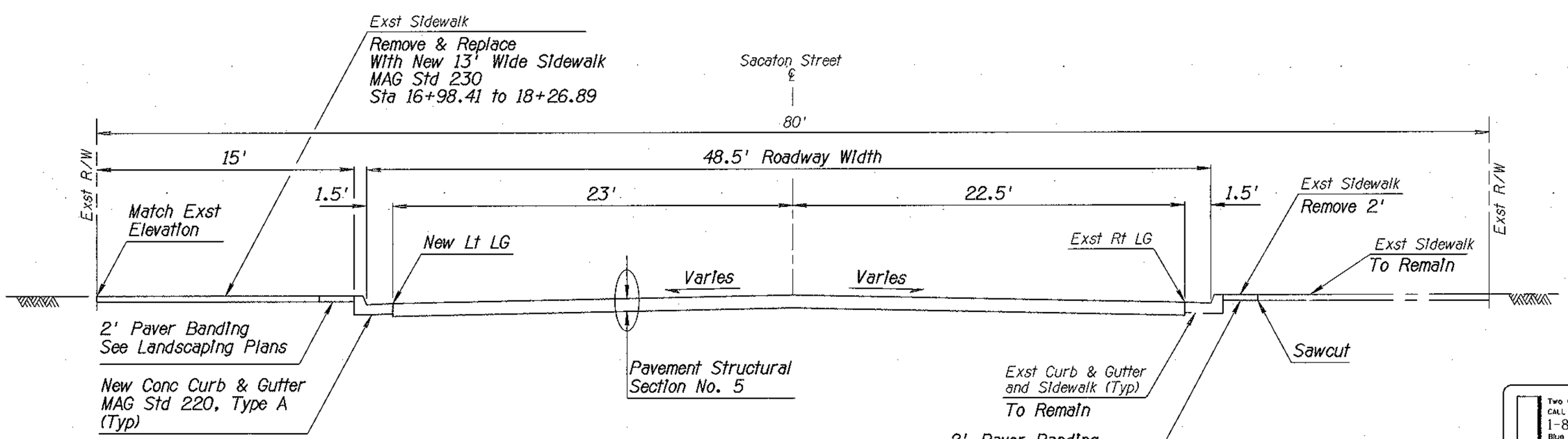

TYPICAL SECTION

Sacaton Street
Sta 16+79.18 to Sta 19+71.19

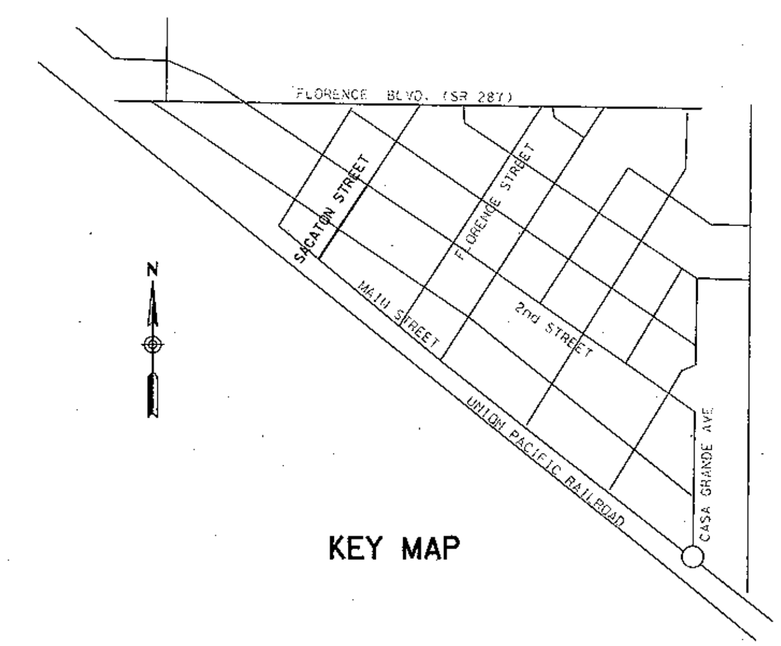

KEY MAP

Two working days before you dig,
CALL FOR THE BLUE STAKES
1-800-782-5348
Blue Stake Center

NO.	DESCRIPTION OF REVISION	MADE BY	DATE

	NAME	DATE
DESIGN	SMM, EGM	02/07
DRAWN	WBE, SC	02/07
CHECKED	SCB, WDS	02/07

City of Casa Grande
510 East Florence Blvd
Casa Grande, Arizona 85222

DMJM HARRIS | AECOM

TYPICAL SECTION
SACATON STREET
STA 13+20.94 TO STA 19+71.52

Registered Professional Engineer (Civil)
CERTIFICATE NO. 23987
EDITH GRIFFITH METTEY
Date Signed 2-7-07

DWG NO. C-2.1

PROJECT NAME
DOWNTOWN STREETS - PHASE I

Sheet No.
26 of 93

NOTE:
See Dwg C-1.3
for Main Street Improvements

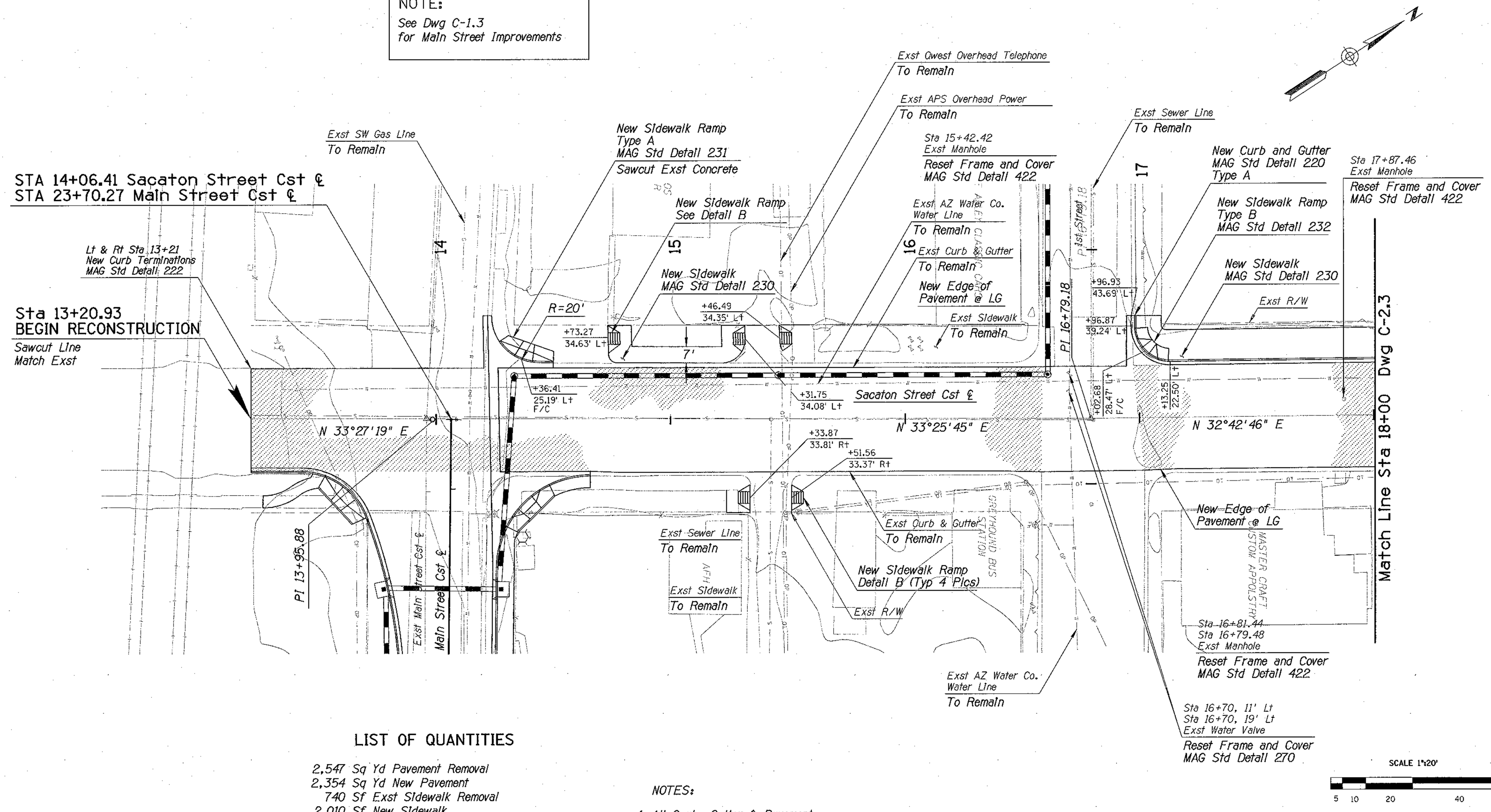

LIST OF QUANTITIES

2,547 Sq Yd Pavement Removal
2,354 Sq Yd New Pavement
740 Sf Exst Sidewalk Removal
2,010 Sf New Sidewalk
1 EA New Sidewalk Ramp, Type A
1 EA New Sidewalk Ramp, Type B
5 EA New Sidewalk Ramp, Detail B
89 Lf Exst Curb and Gutter Removal
89 Lf New Curb and Gutter
3 EA Manhole-Reset Frame and Cover
2 EA Valve-Reset Frame and Cover

NOTES:

1. All Curb, Gutter & Pavement Control Points are Dimensioned to Lip of Gutter Unless Otherwise Shown.
2. See Separate Water Modification Plans Prepared by Arizona Water Company for Modifications to Existing Water System.

Two working days before you dig.
CALL FOR THE BLUE STAKES
1-800-782-5348
Blue Stake Center

NO.	DESCRIPTION OF REVISION	MADE BY	DATE

	NAME	DATE
DESIGN	SMM, EGM	02/07
DRAWN	WBE, SC	02/07
CHECKED	SCB, WDS	02/07

DMJM HARRIS | AECOM

City of Casa Grande
510 East Florence Blvd
Casa Grande, Arizona 85222

PLAN SHEET
SACATON STREET
STA 13+21 TO STA 18+00

PROJECT NAME
DOWNTOWN STREETS - PHASE I

Registered Professional Engineer (Civil)
CERTIFICATE NO. 23987
EDITH GRIFFITH METTEY
Date Signed 1-7-08
Arizona, U.S.A.

DWG NO. C2.2
Sheet No.
27 of 93

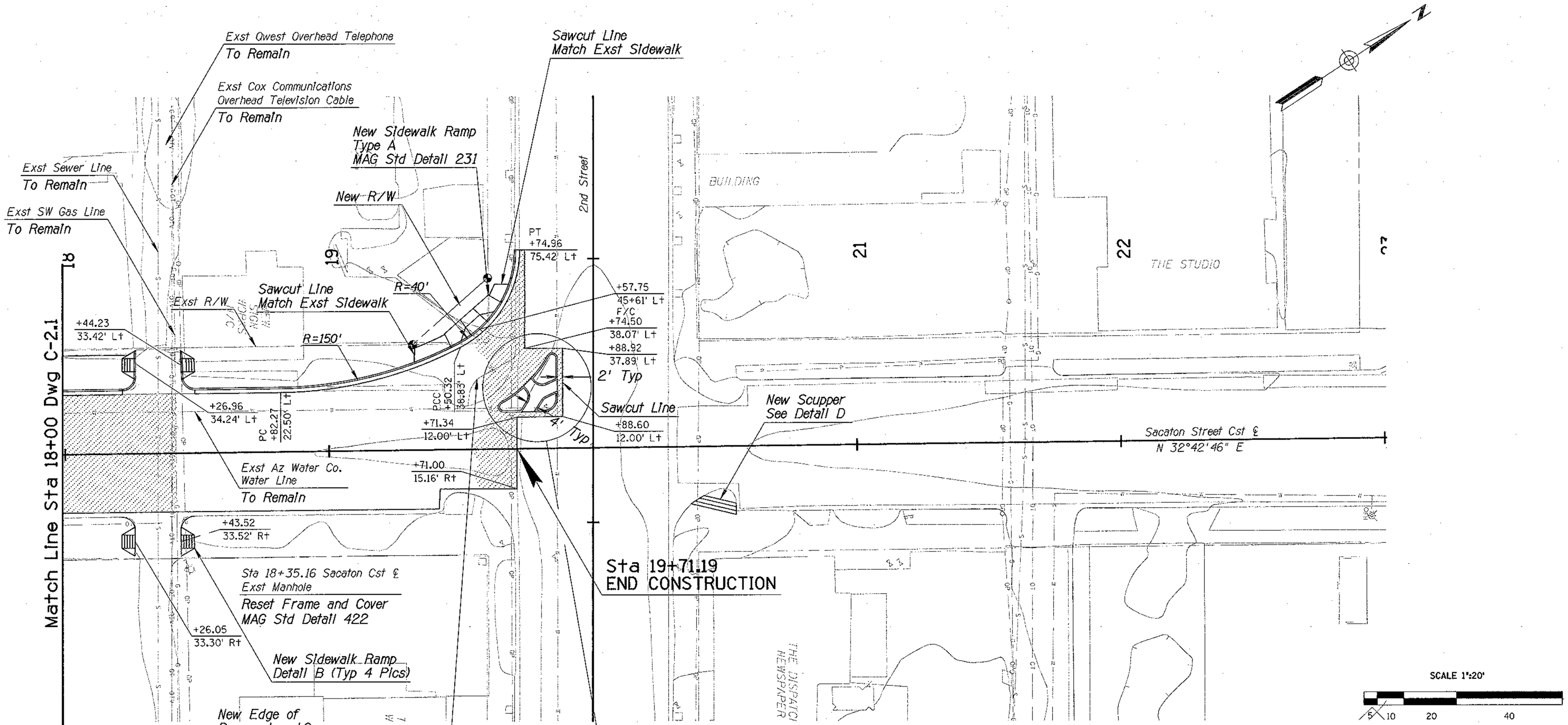

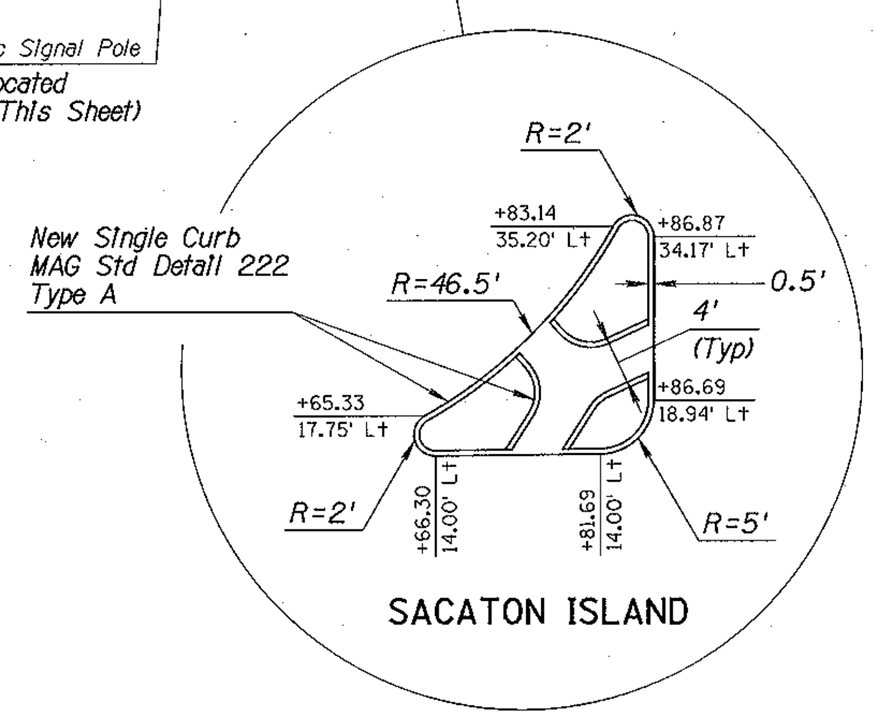

LIST OF QUANTITIES

901 Sq Yd Pavement Removal
991 Sq Yd New Pavement
1 EA Manhole-Reset Frame and Cover
174 Lf New Curb and Gutter
152 Lf Exst Curb and Gutter Removal
509 Sf New Sidewalk
1 EA New Sidewalk Ramp, Type A
4 EA New Sidewalk Ramp, Detail B
1,135 Sf Exst Sidewalk Removal
18 Lf New Scupper

NOTES:

1. All Curb, Gutter & Pavement Control Points are Dimensioned to Lip of Gutter Unless Otherwise Shown.
2. See Separate Water Modification Plans prepared by Arizona Water Company for Modifications to Existing Water System.
3. Contractor to relocate the existing traffic signal pole to a location designated in the field by the Engineer. See special provisions.
4. All stationing and offsets are from Sacaton Street.

Two working days before you dig.
CALL FOR THE BLUE STAKES
1-800-782-5348
Blue Stake Center

NO.	DESCRIPTION OF REVISION	MADE BY	DATE

	NAME	DATE
DESIGN	SMM, EGM	02/07
DRAWN	WBE, SC	02/07
CHECKED	SCB, WDS	02/07

DMJM HARRIS | AECOM

City of Casa Grande
510 East Florence Blvd
Casa Grande, Arizona 85222

PLAN SHEET
SACATON STREET
STA 18+00 TO STA 23+00

PROJECT NAME
DOWNTOWN STREETS - PHASE I

Registered Professional Engineer (Civil)
CERTIFICATE NO. 23997
EDITH GRIFFITH METTEY
Date Signed 2-7-07
Arizona, U.S.A.

DWG NO. C-2.3
Sheet No.
28 of 93

No.	Station	Offset	Elevation
50	50+49.03 Main	2.50' Lt	02.05
51	50+47.50 Main	0.00	02.10
52	50+49.03 Main	4.00' Rt	02.03
53	50+50.46 Main	18.50' Rt	01.75
54	50+75.46 Main	5.50' Rt	02.09
55	51+23.92 Main	7.77' Rt	02.20
56	51+49.38 Main	9.78' Rt	02.26
57	51+80.29 Main	17.65' Rt	02.54
58	51+81.68 Main	16.55' Rt	02.55
59	51+79.77 Main	3.89' Rt	02.35
60	51+77.89 Main	8.55' Lt	02.30
61	51+74.27 Main	11.03' Lt	02.27
62	52+16.43 Main	2.05' Rt	02.74
63	52+17.54 Main	9.68' Rt	02.74
64	52+29.09 Main	29.67' Rt	02.73
65	52+57.07 Main	41.00' Rt	03.07
66	52+82.34 J. Kerr	32.30' Rt	03.42
67	52+98.03 J. Kerr	2.44' Rt	03.57
68	56+36.00 C.G.	32.65' Lt	03.12
69	56+20.11 C.G.	5.35' Lt	02.75
70	56+19.76 C.G.	0.00'	02.70

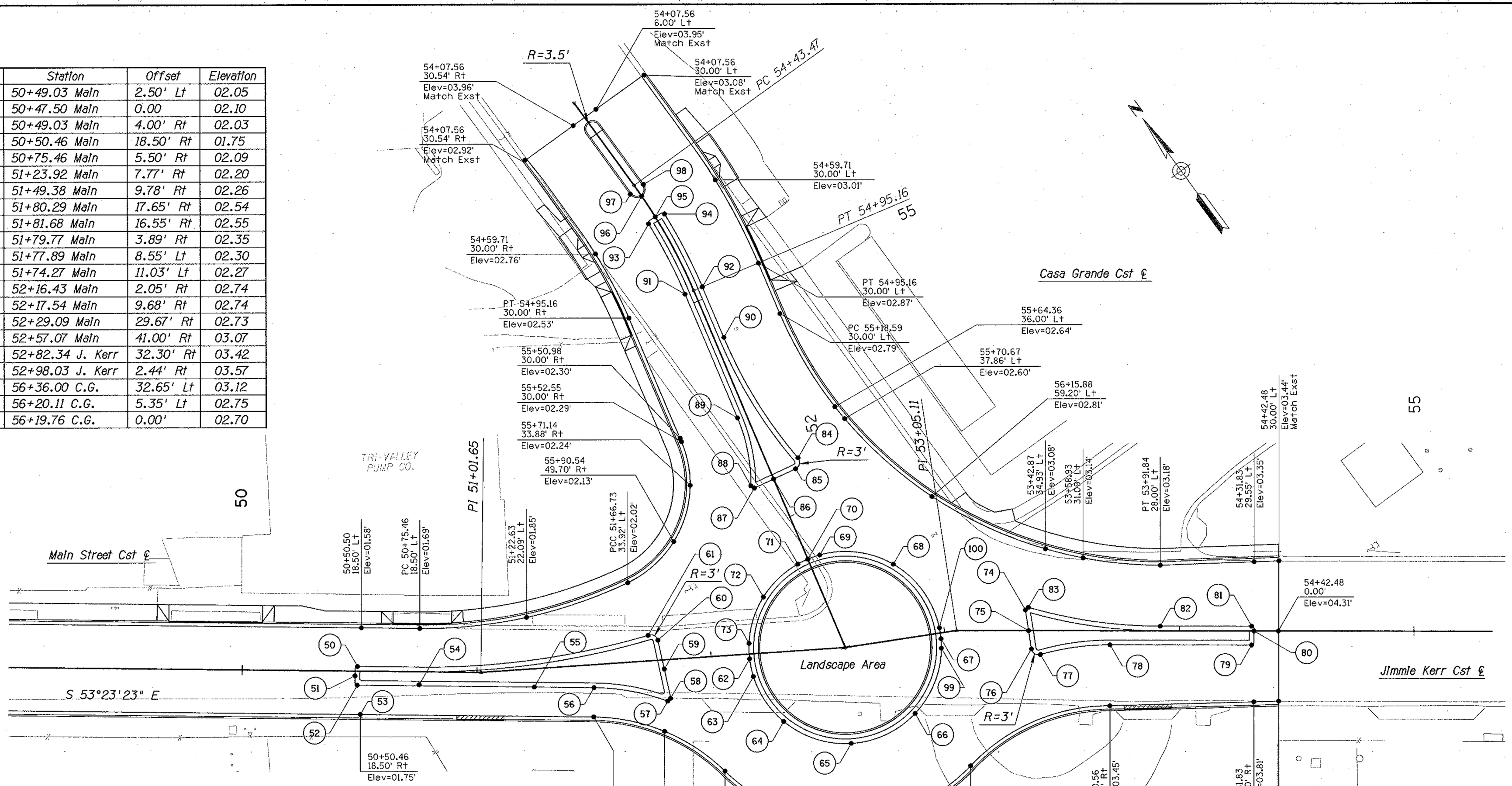

No.	Station	Offset	Elevation
71	56+20.03 C.G.	4.80' Rt	02.75'
72	56+27.28 C.G.	23.70' Rt	02.75'
73	52+16.63 Main	4.55' Lt	02.75'
74	53+34.39 J. Kerr	8.83' Lt	03.35'
75	53+35.79 J. Kerr	0.00'	03.47'
76	53+37.02 J. Kerr	7.79' Rt	03.50'
77	53+40.82 J. Kerr	10.20' Rt	03.55'
78	53+70.56 J. Kerr	6.00' Rt	03.73'
79	54+30.83 J. Kerr	6.00' Rt	04.09'
80	54+31.83 J. Kerr	0.00'	04.16'
81	54+30.83 J. Kerr	2.00' Lt	04.11'
82	53+91.84 J. Kerr	2.00' Lt	03.82'
83	53+35.65 J. Kerr	9.95' Lt	03.33'
84	55+78.32 C.G.	13.01' Lt	02.42'
85	55+82.20 C.G.	10.26' Lt	02.40'

No.	Station	Offset	Elevation
86	55+82.58 C.G.	0.00'	02.35
87	55+82.93 C.G.	9.09' Rt	02.30
88	55+81.53 C.G.	10.04' Rt	02.35
89	55+52.55 C.G.	4.00 Rt	02.60
90	55+18.59 C.G.	4.00' Lt	03.09
91	54+95.16 C.G.	4.00' Rt	03.37
92	54+95.16 C.G.	4.00' Lt	03.31
93	54+60.72 C.G.	4.00' Rt	03.82
94	54+60.72 C.G.	4.00' Lt	03.66
95	54+59.71 C.G.	0.00'	03.86
96	54+49.06 C.G.	0.00'	04.12
97	54+45.60 C.G	3.49' Rt	04.01
98	54+45.47 C.G.	3.51' Lt	04.05
99	52+97.58 J. Kerr	6.48' Rt	03.62
100	52+98.04 J. Kerr	2.24' Lt	03.57

GENERAL NOTES

Base Elevation = 1400.00
Elevations are at joint between pavement and gutter or at joint between pavement and curb. See paving plans for geometric layout.

All dimensions are measured to lip of gutter.

All curb radii = 1' unless noted otherwise.

Two working days before you dig, CALL FOR THE BLUE STAKES
1-800-782-5348
Blue Stake Center

NO.	DESCRIPTION OF REVISION	MADE BY	DATE

	NAME	DATE
DESIGN	SMM, EGM	02/07
DRAWN	WBE, SC	02/07
CHECKED	SCB, WDS	02/07

City of Casa Grande
510 East Florence Blvd
Casa Grande, Arizona 85222

DMJM HARRIS | AECOM

STAKING DIAGRAM
MAIN STREET/CASA GRANDE AVE
ROUNDABOUT

PROJECT NAME
DOWNTOWN STREETS - PHASE I

Registered Professional Engineer (Civil)
CERTIFICATE NO. 23987
EDITH GRIFFITH METTEY
Date Signed 2-7-07

DWG NO. C3.1
Sheet No.
29 of 93

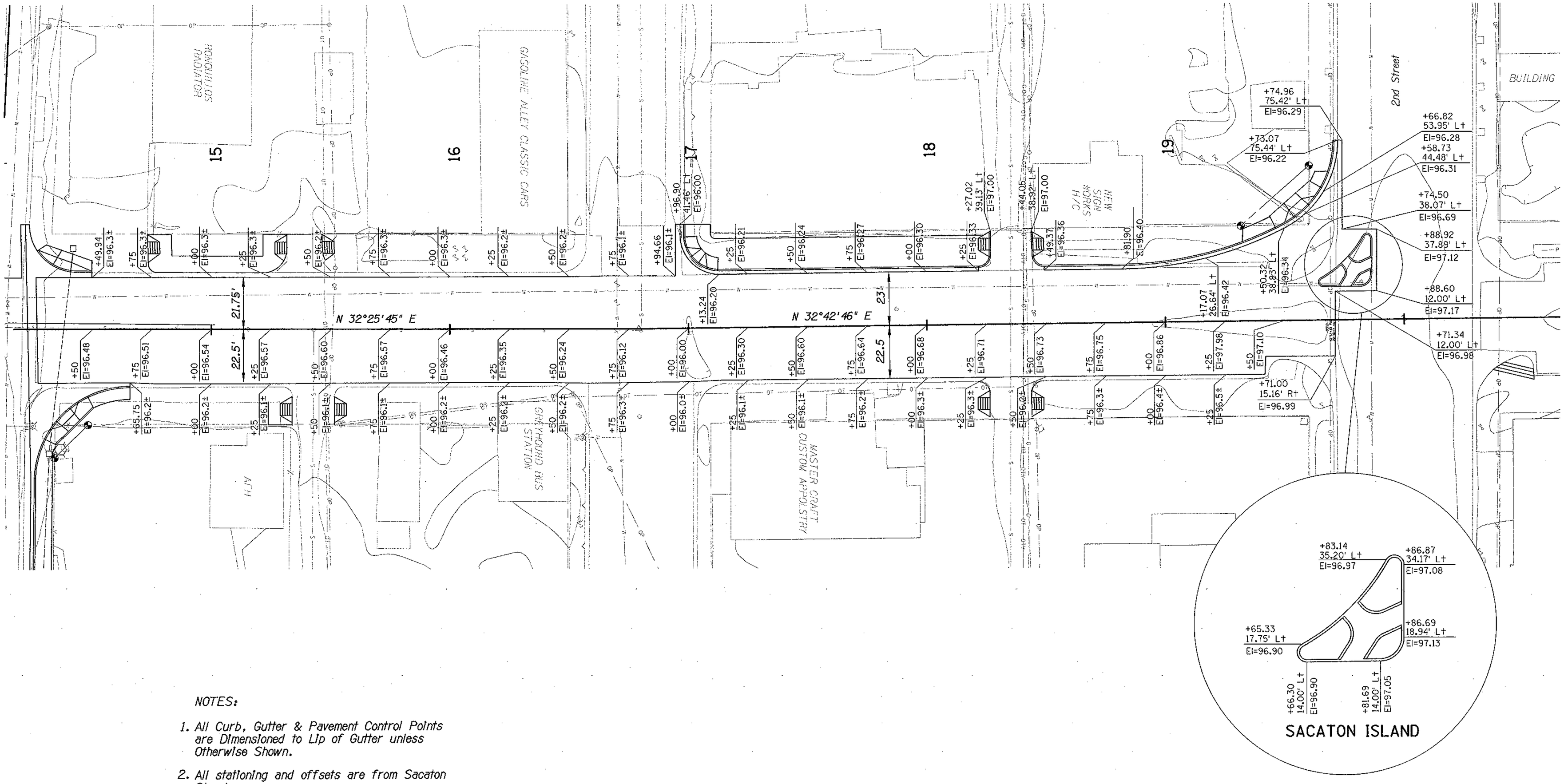

NOTES:

1. All Curb, Gutter & Pavement Control Points are Dimensioned to Lip of Gutter unless Otherwise Shown.
2. All stationing and offsets are from Sacaton Street.

Two working days before you dig.
CALL FOR THE BLUE STAKES
1-800-782-5348
Blue Stake Center

NO.	DESCRIPTION OF REVISION	MADE BY	DATE

	NAME	DATE
DESIGN	SMM, EGM	02/07
DRAWN	WBE, SC	02/07
CHECKED	SCB, WDS	02/07

City of Casa Grande
510 East Florence Blvd
Casa Grande, Arizona 85222

DMJM HARRIS | AECOM

STAKING DIAGRAM
SACATON STREET

Registered Professional Engineer (Civil)
CERTIFICATE NO. 23987
EDITH GRIFFITH METTEY
Date Signed 4-15-07
Arizona, U.S.A.

PROJECT NAME
DOWNTOWN STREETS - PHASE I

DWG NO.

Sheet No.
30 of 93

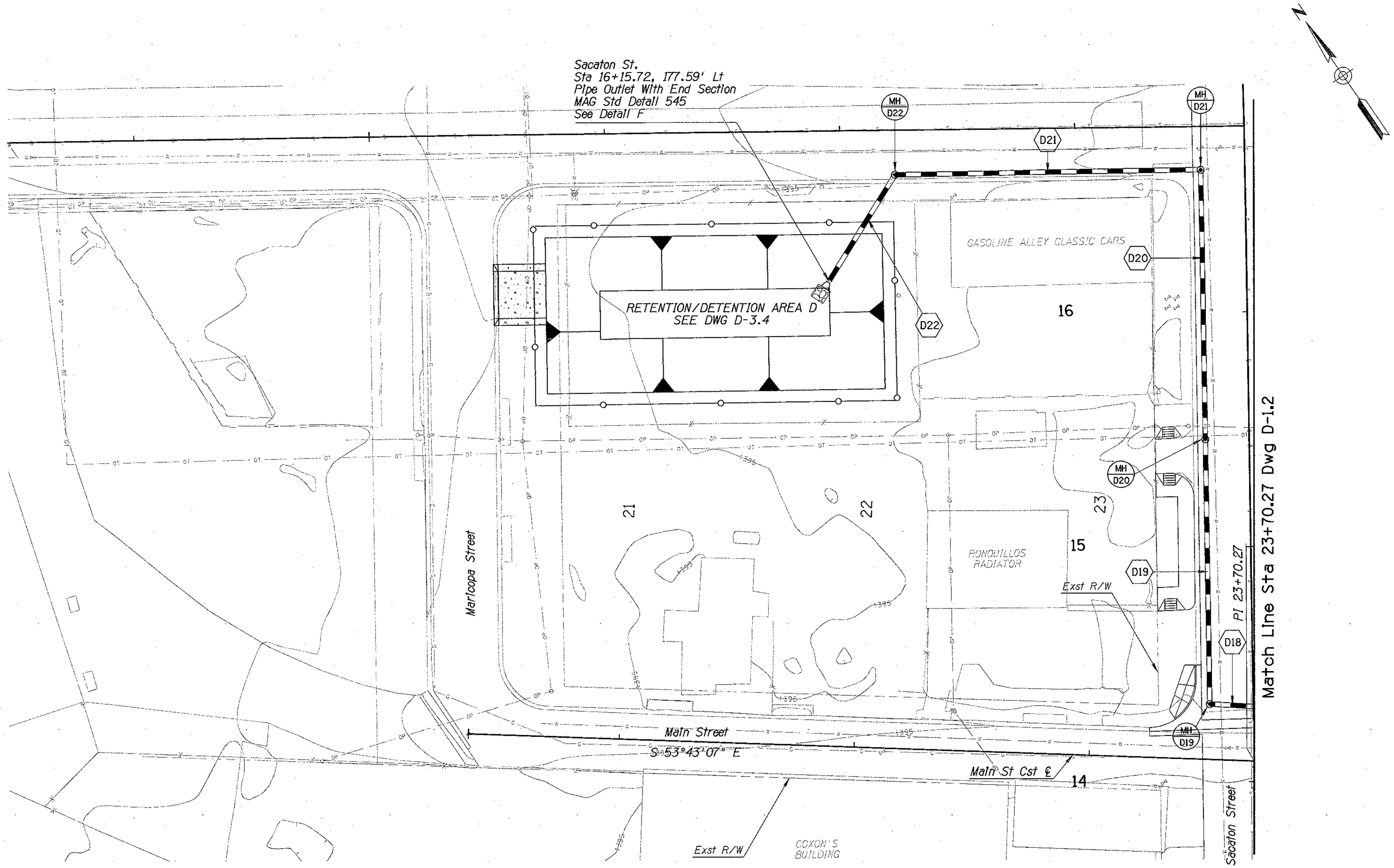

Two working days before you dig.
CALL FOR THE BLUE STAKES
1-800-782-5348
Blue Stake Center

NO.	DESCRIPTION OF REVISION	MADE BY	DATE

	NAME	DATE
DESIGN	JAS	02/07
DRAWN	ETB, RLH, JMS, SC	02/07
CHECKED	MHB, EGM, WDS	02/07

DMJM HARRIS | AECOM

City of Casa Grande
510 East Florence Blvd
Casa Grande, Arizona 85222

STORM DRAIN PLAN

PROJECT NAME
DOWNTOWN STREETS - PHASE I

REGISTERED PROFESSIONAL ENGINEER (CIVIL)
CERTIFICATE NO. 20959
JOHN P VAN ECHO
Date Signed 2-7-07
ARIZONA U.S.A.

DWG NO. D-1.1
Sheet No.
31 of 93

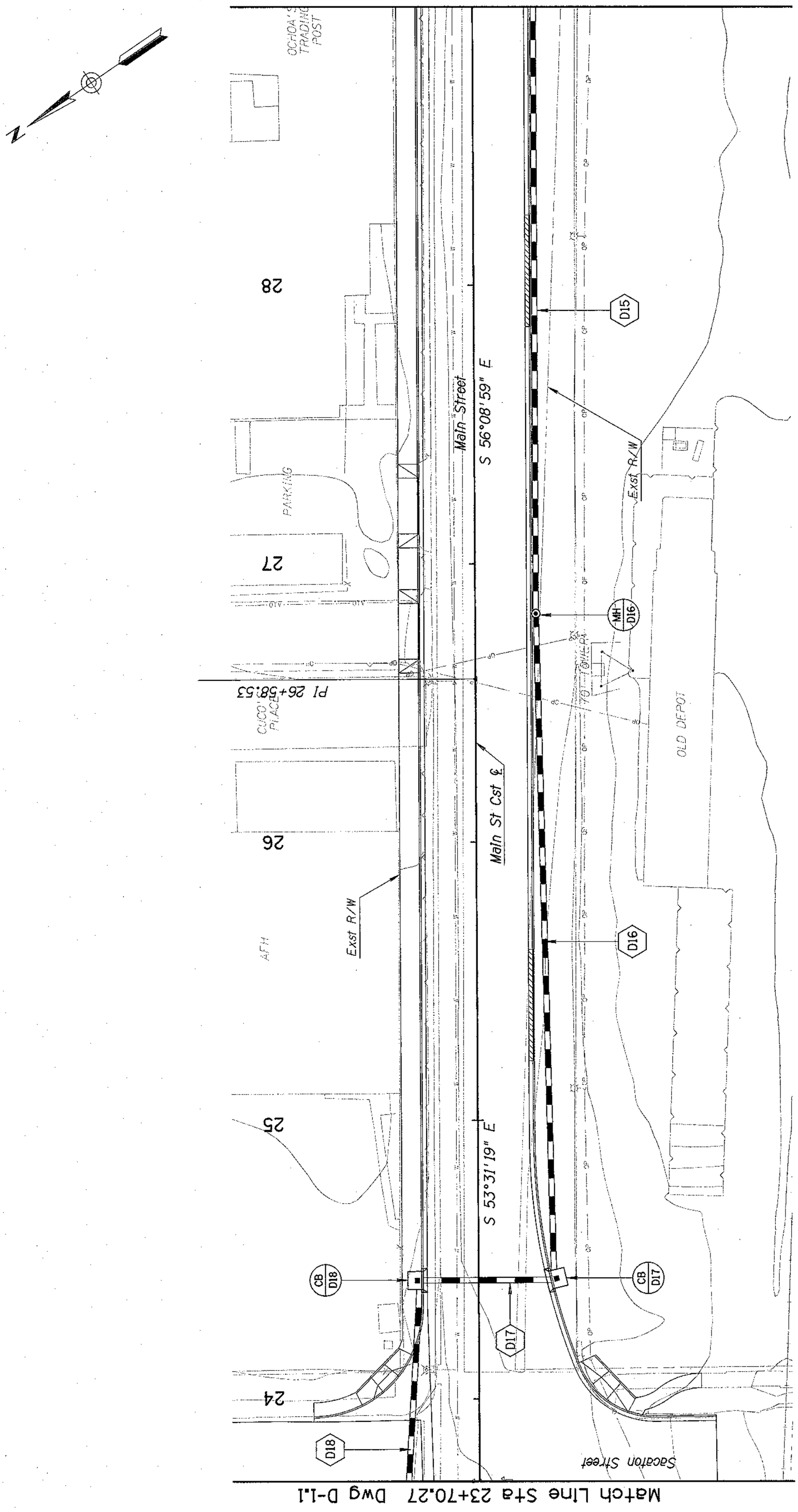

MAIN STREET DRAINAGE PLANS
STA 23+70.27 to STA 29+00

	NAME	DATE
DESIGN	JAS	02/07
DRAWN	ETB, RLH, JMS, SC	02/07
CHECKED	MHB, EGM, WDS	02/07

DMJM HARRIS | AECOM

City of Casa Grande
510 East Florence Blvd
Casa Grande, Arizona 85222

STORM DRAIN PLAN

PROJECT NAME

DOWNTOWN STREETS - PHASE I

NO.	DESCRIPTION OF REVISION	MADE BY	DATE

Two working days before you dig.
CALL FOR THE BLUE STAKES
1-800-782-5348
Blue Stake Center

REGISTERED PROFESSIONAL ENGINEER (CIVIL) CERTIFICATE NO. 20959 JOHN P. VAN ECHO Date Signed 2-7-07 ARIZONA U.S.A.

DWG NO. D-1.2

Sheet No. 32 of 93

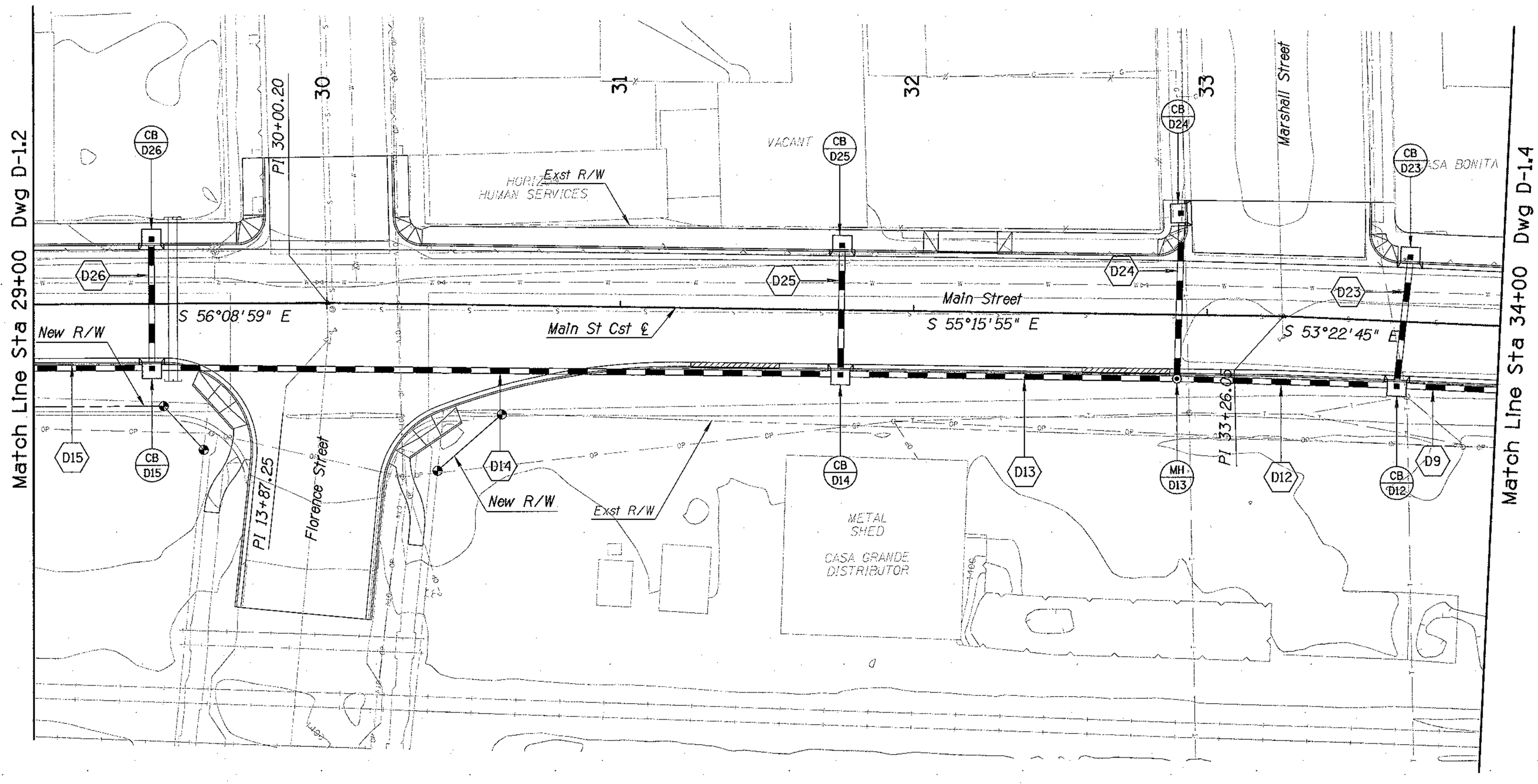

MAIN STREET DRAINAGE PLANS
STA 29+00 to STA 34+00

Two working days before you dig.
CALL FOR THE BLUE STAKES
1-800-782-5348
Blue Stake Center

NO.	DESCRIPTION OF REVISION	MADE BY	DATE

	NAME	DATE
DESIGN	JAS	02/07
DRAWN	ETB, RLH, JMS, SC	02/07
CHECKED	MHB, EGM, WDS	02/07

City of Casa Grande
510 East Florence Blvd
Casa Grande, Arizona 85222

DMJM HARRIS | AECOM

STORM DRAIN PLAN

REGISTERED PROFESSIONAL ENGINEER (CIVIL)
CERTIFICATE NO. 20959
JOHN P. VAN ECHO
Date Signed 2-7-07
ARIZONA U.S.A.

PROJECT NAME
DOWNTOWN STREETS - PHASE I

DWG NO. D-1.3

Sheet No.
33 of 93

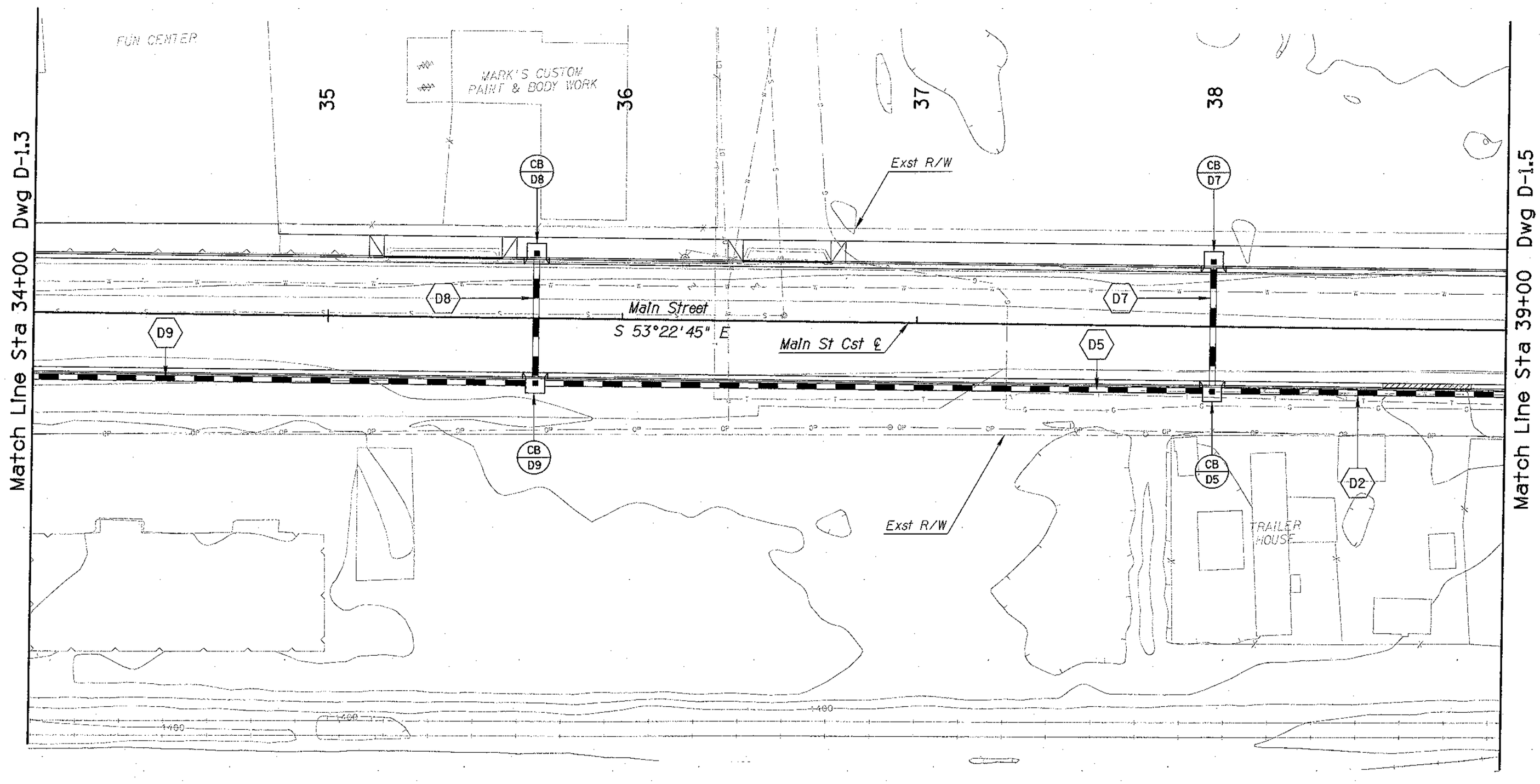

MAIN STREET DRAINAGE PLANS
STA 34+00 to STA 39+00

Two working days before you dig.
CALL FOR THE BLUE STAKES
1-800-782-5348
Blue Stake Center

NO.	DESCRIPTION OF REVISION	MADE BY	DATE

	NAME	DATE
DESIGN	JAS	02/07
DRAWN	ETB, RLH, JMS, SC	02/07
CHECKED	MHB, EGM, WDS	02/07

City of Casa Grande
510 East Florence Blvd
Casa Grande, Arizona 85222

DMJM HARRIS | AECOM

STORM DRAIN PLAN

REGISTERED PROFESSIONAL ENGINEER (CIVIL)
CERTIFICATE NO. 20959
JOHN P VAN ECHO
Date Signed 2-7-07
ARIZONA U.S.A.

PROJECT NAME
DOWNTOWN STREETS - PHASE I

DWG NO. D-1.4

Sheet No.
34 of 93

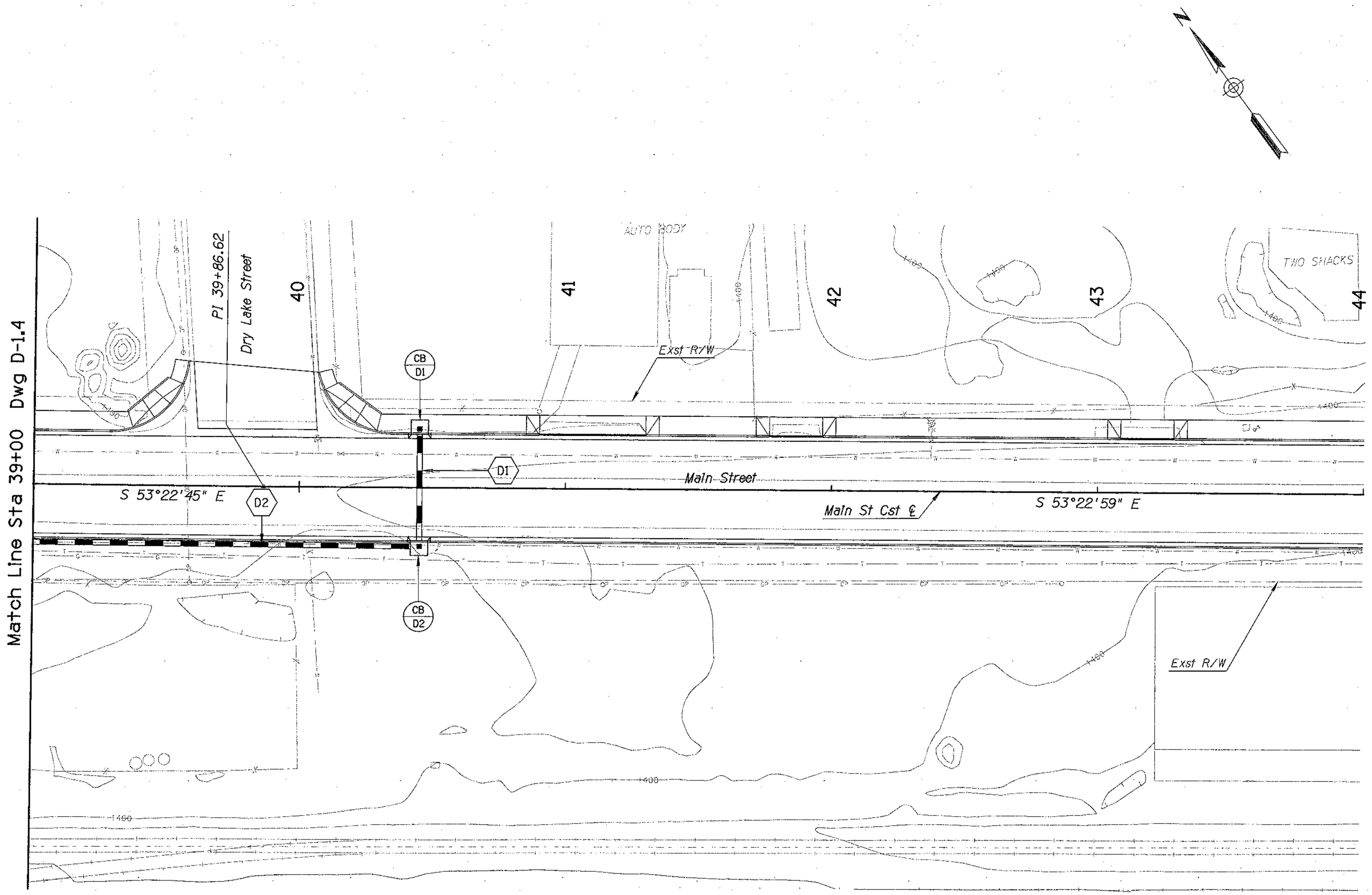

MAIN STREET DRAINAGE PLANS
STA 39+00 to STA 44+00

Two working days before you dig.
CALL FOR THE BLUE STAKES
1-800-782-5348
Blue Stake Center

NO.	DESCRIPTION OF REVISION	MADE BY	DATE

	NAME	DATE
DESIGN	JAS	02/07
DRAWN	ETB, RLH, JMS, SC	02/07
CHECKED	MHB, EGM, WDS	02/07

City of Casa Grande
510 East Florence Blvd
Casa Grande, Arizona 85222

DMJM HARRIS | AECOM

STORM DRAIN PLAN

REGISTERED PROFESSIONAL ENGINEER (CIVIL)
CERTIFICATE NO. 20959
JOHN P VAN ECHO
ARIZONA U.S.A.
2-7-07

PROJECT NAME
DOWNTOWN STREETS - PHASE I

DWG NO. D-1.5
Sheet No.
35 of 93

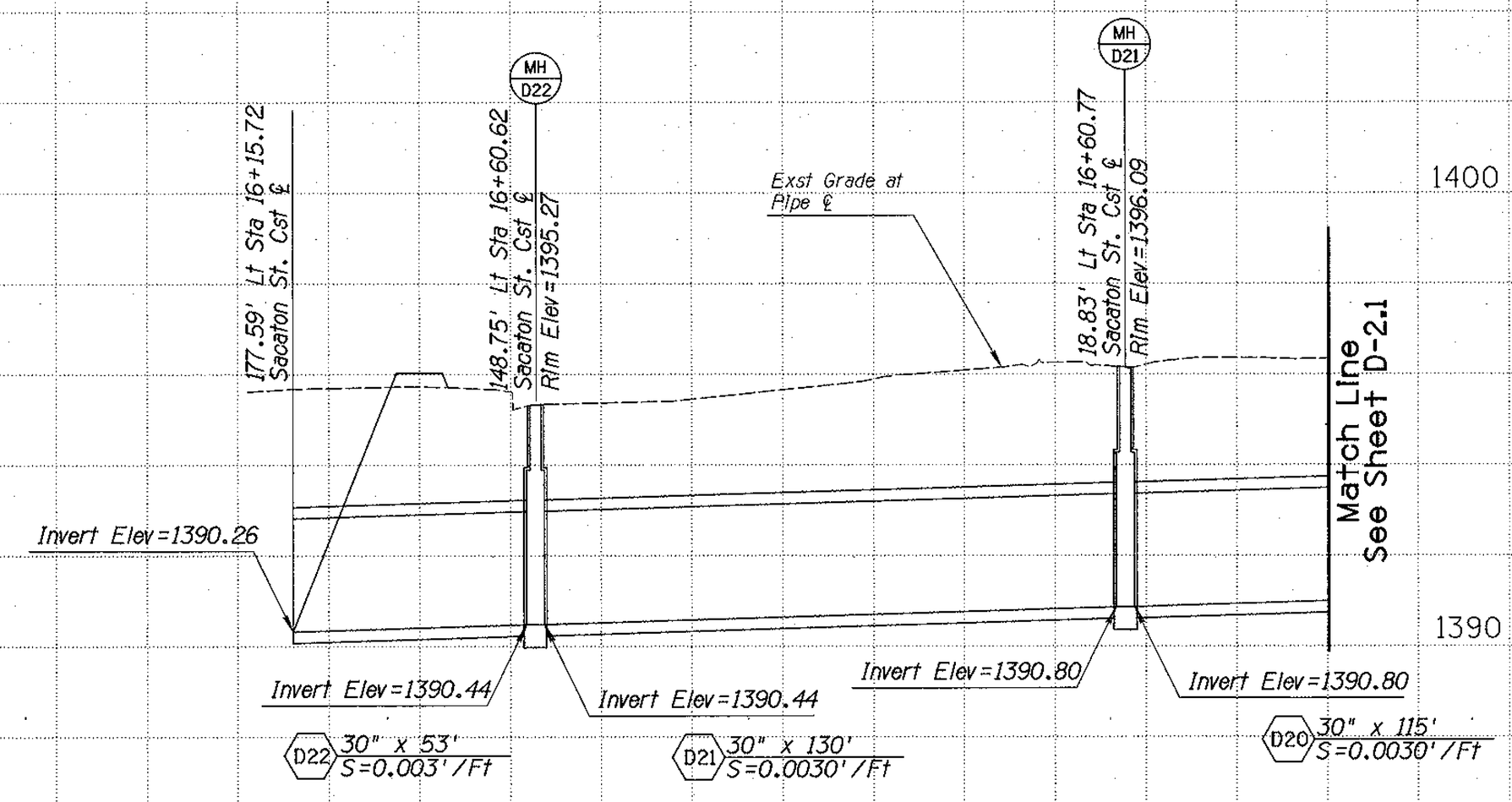

Two working days before you dig.
CALL FOR THE BLUE STAKES
1-800-782-5348
Blue Stake Center

NO.	DESCRIPTION OF REVISION	MADE BY	DATE

	NAME	DATE
DESIGN	JAS	02/07
DRAWN	ETB, RLH, JMS, SC	02/07
CHECKED	MHB, EGM, WDS	02/07

City of Casa Grande
510 East Florence Blvd
Casa Grande, Arizona 85222

DMJM HARRIS | AECOM

STORM DRAIN PROFILES

PROJECT NAME
DOWNTOWN STREETS - PHASE I

REGISTERED PROFESSIONAL ENGINEER (CIVIL)
CERTIFICATE NO. 20959
JOHN P VAN ECHO
Date 2-7-07
ARIZONA U.S.A.

DWG NO. D-2.1
Sheet No.
36 of 93

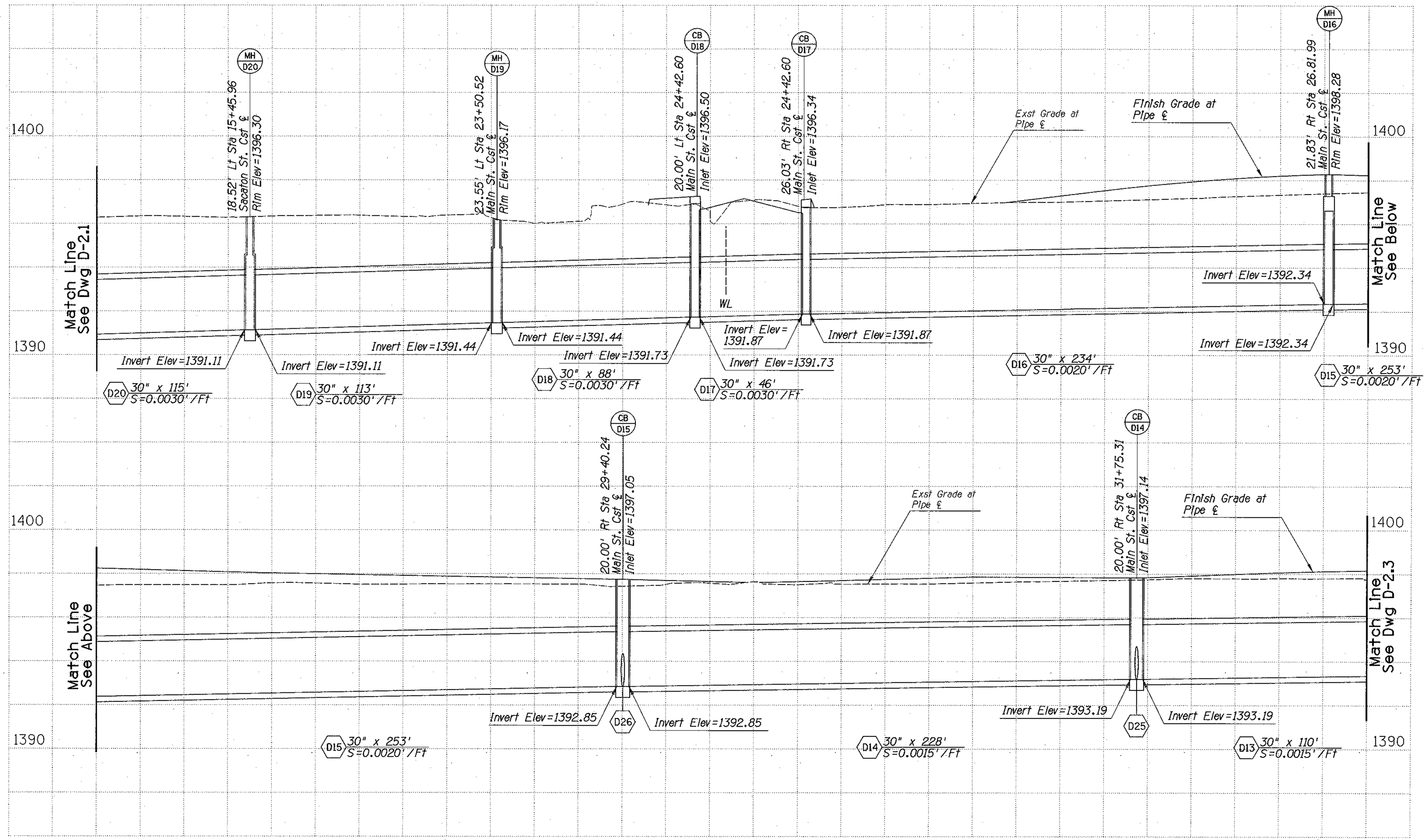

Two working days before you dig.
CALL FOR THE BLUE STAKES
1-800-782-5348
Blue Stake Center

NO.	DESCRIPTION OF REVISION	MADE BY	DATE

	NAME	DATE
DESIGN	JAS	02/07
DRAWN	ETB, RLH, JMS, SC	02/07
CHECKED	MHB, EGM, WDS	02/07

DMJM HARRIS | AECOM

City of Casa Grande
510 East Florence Blvd
Casa Grande, Arizona 85222

STORM DRAIN PROFILES

REGISTERED PROFESSIONAL ENGINEER (CIVIL)
CERTIFICATE NO. 20959
JOHN P. VAN ECHO
Date 2-7-07
ARIZONA, U.S.A.

PROJECT NAME
DOWNTOWN STREETS - PHASE I

DWG No. D-2.2

Sheet No.
37 of 93

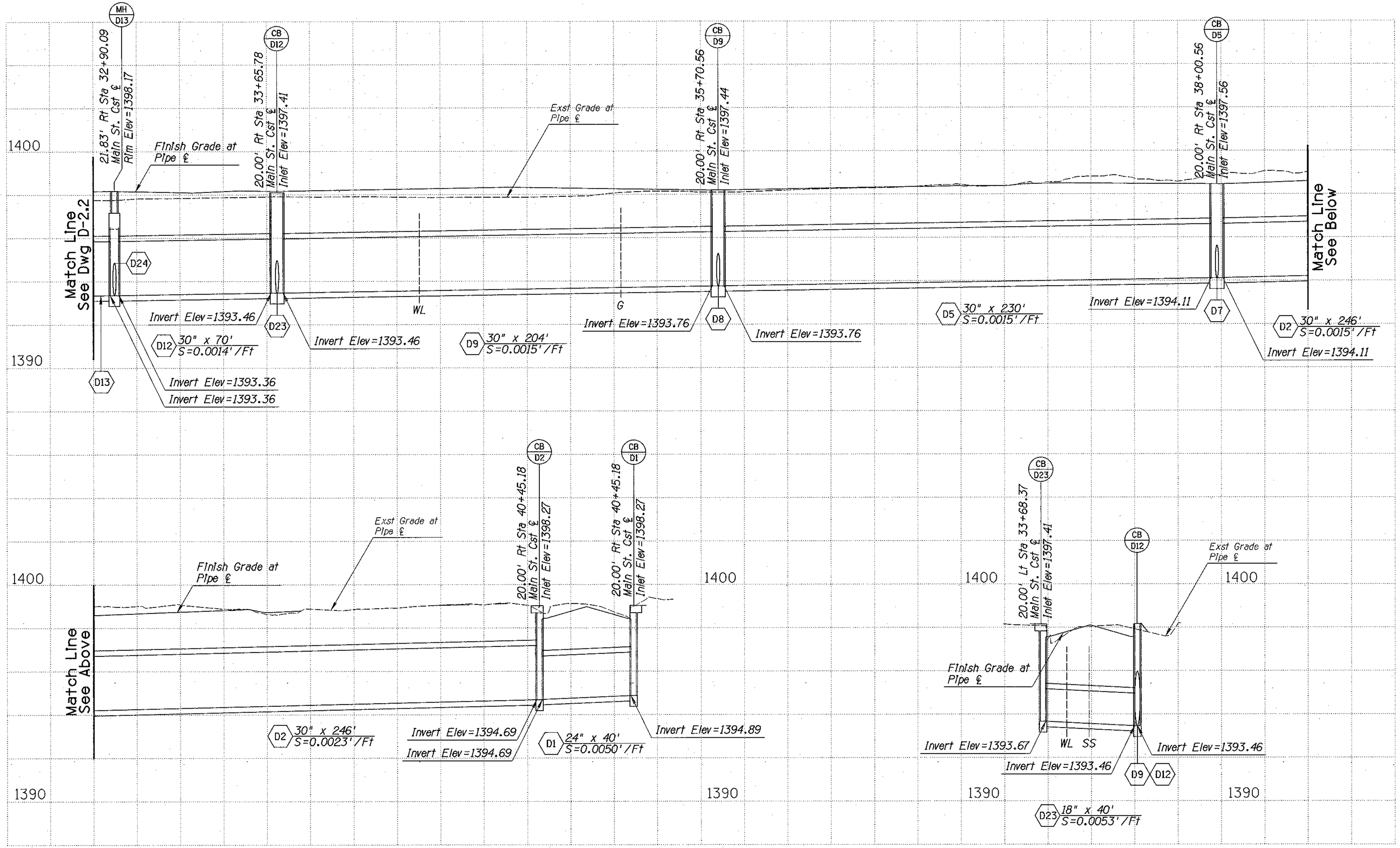

Two working days before you dig.
CALL FOR THE BLUE STAKES
1-800-782-5348
Blue Stake Center

NO.	DESCRIPTION OF REVISION	MADE BY	DATE

	NAME	DATE
DESIGN	JAS	02/07
DRAWN	ETB, RLH, JMS, SC	02/07
CHECKED	MHB, EGM, WDS	02/07

City of Casa Grande
510 East Florence Blvd
Casa Grande, Arizona 85222

DMJM HARRIS | AECOM

STORM DRAIN PROFILES

REGISTERED PROFESSIONAL ENGINEER (CIVIL)
CERTIFICATE NO. 20959
JOHN P VAN ECHO
Date Signed 2-7-07
ARIZONA U.S.A.

PROJECT NAME
DOWNTOWN STREETS - PHASE I

DWG NO. D-2.3
Sheet No.
38 of 93

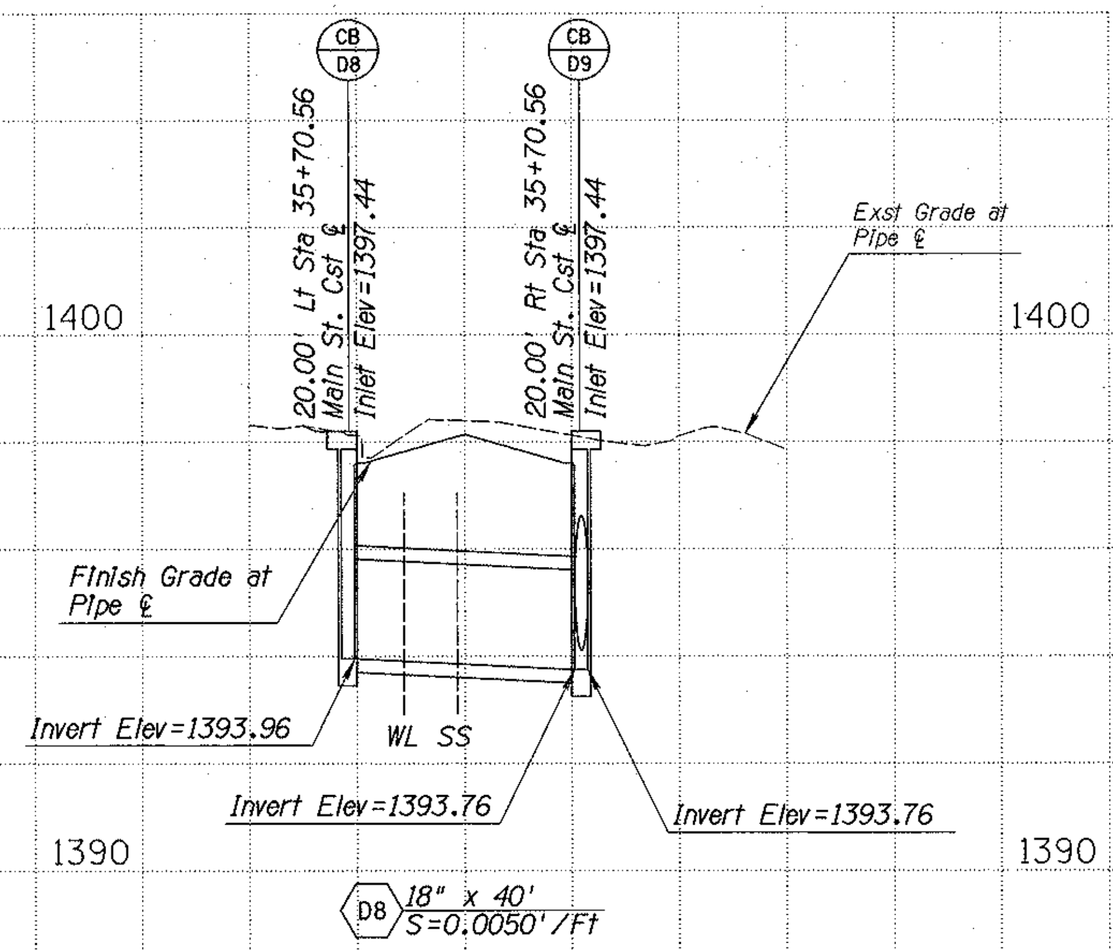

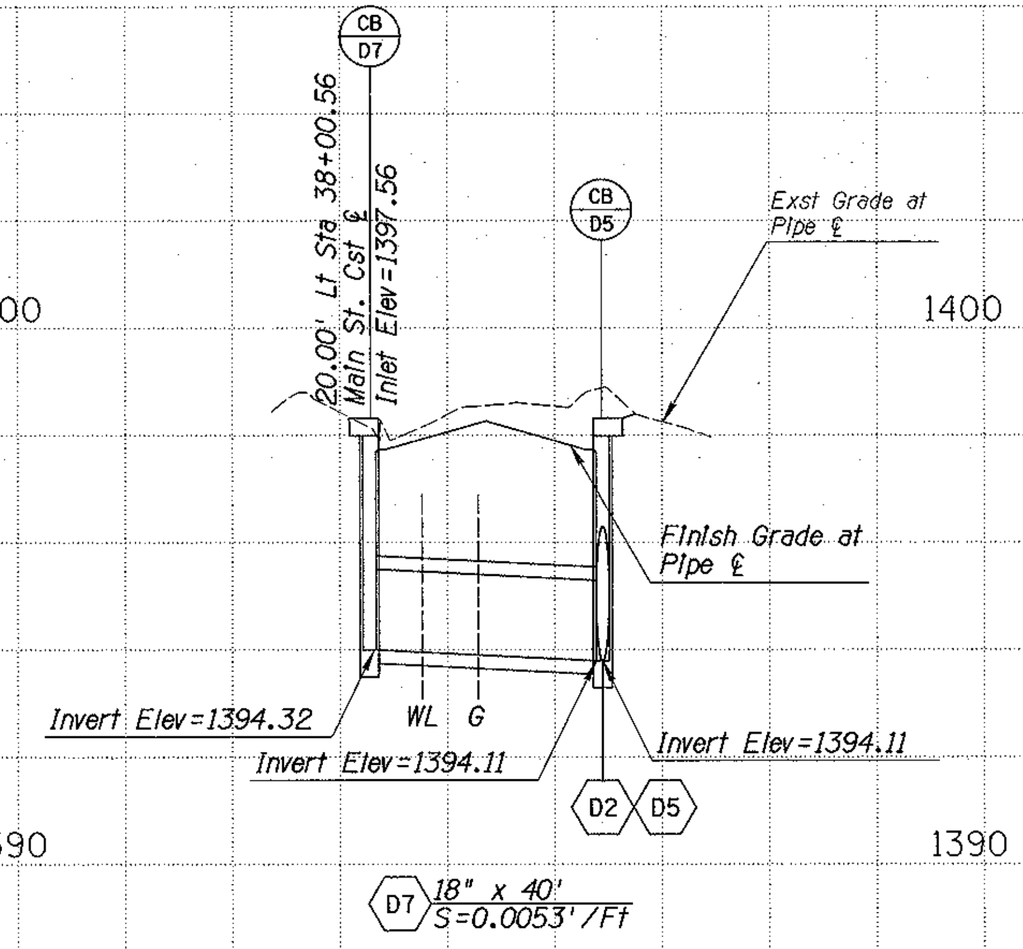

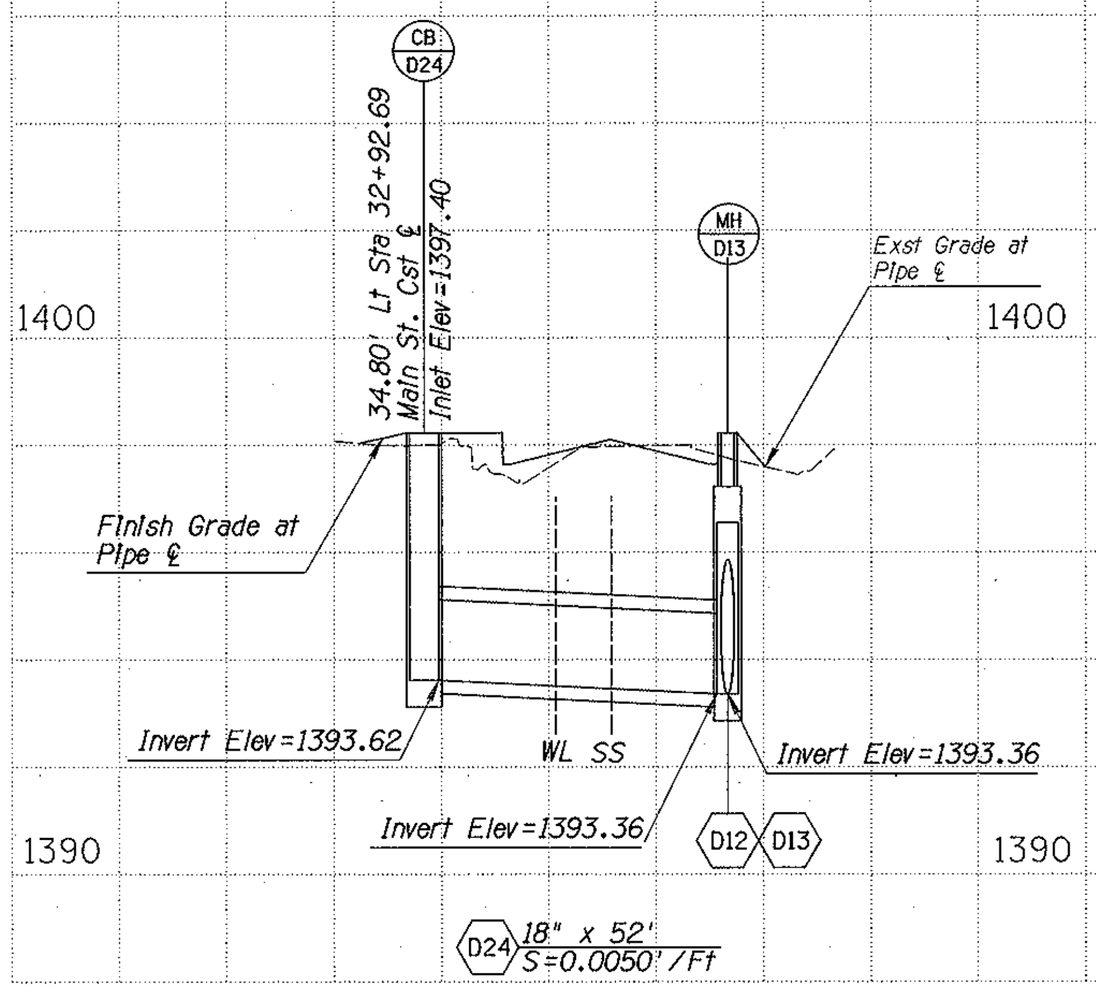

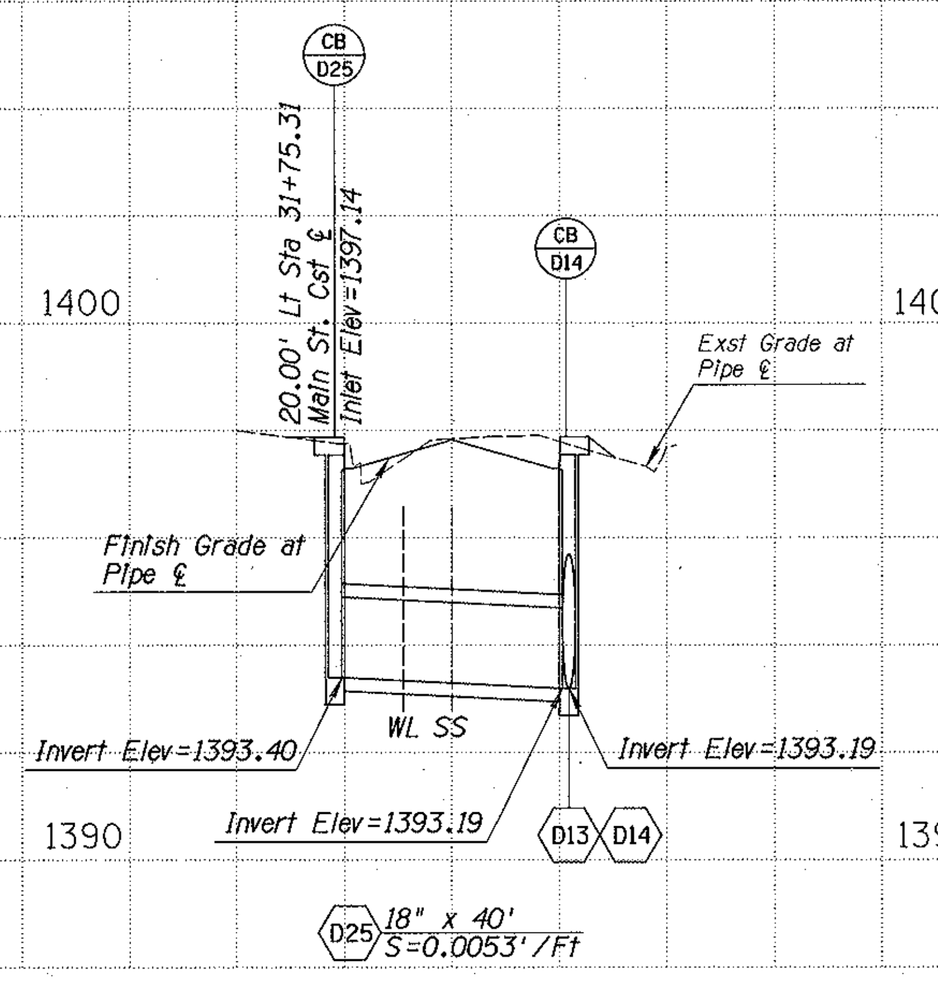

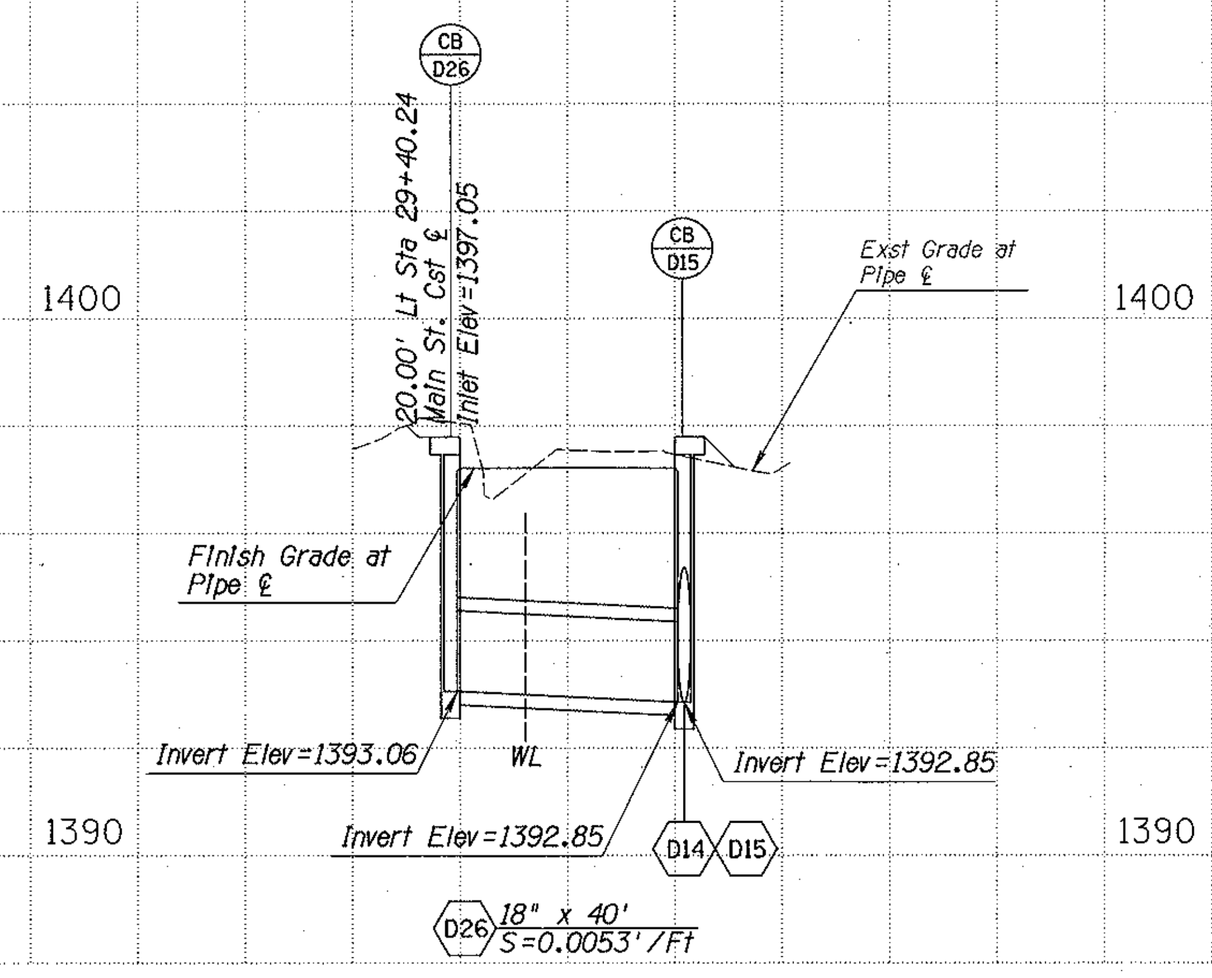

Two working days before you dig.
CALL FOR THE BLUE STAKES
1-800-782-5348
Blue Stake Center

NO.	DESCRIPTION OF REVISION	MADE BY	DATE

	NAME	DATE
DESIGN	JAS	02/07
DRAWN	ETB, RLH, JMS, SC	02/07
CHECKED	MHB, EGM, WDS	02/07

City of Casa Grande
510 East Florence Blvd
Casa Grande, Arizona 85222

DMJM HARRIS | AECOM

STORM DRAIN PROFILES

PROJECT NAME
DOWNTOWN STREETS - PHASE I

REGISTERED PROFESSIONAL ENGINEER (CIVIL)
CERTIFICATE NO. 20959
JOHN P VAN ECHO
Date Signed 2-7-07
ARIZONA U.S.A.

DWG NO. D-2.4
Sheet No.
39 of 93

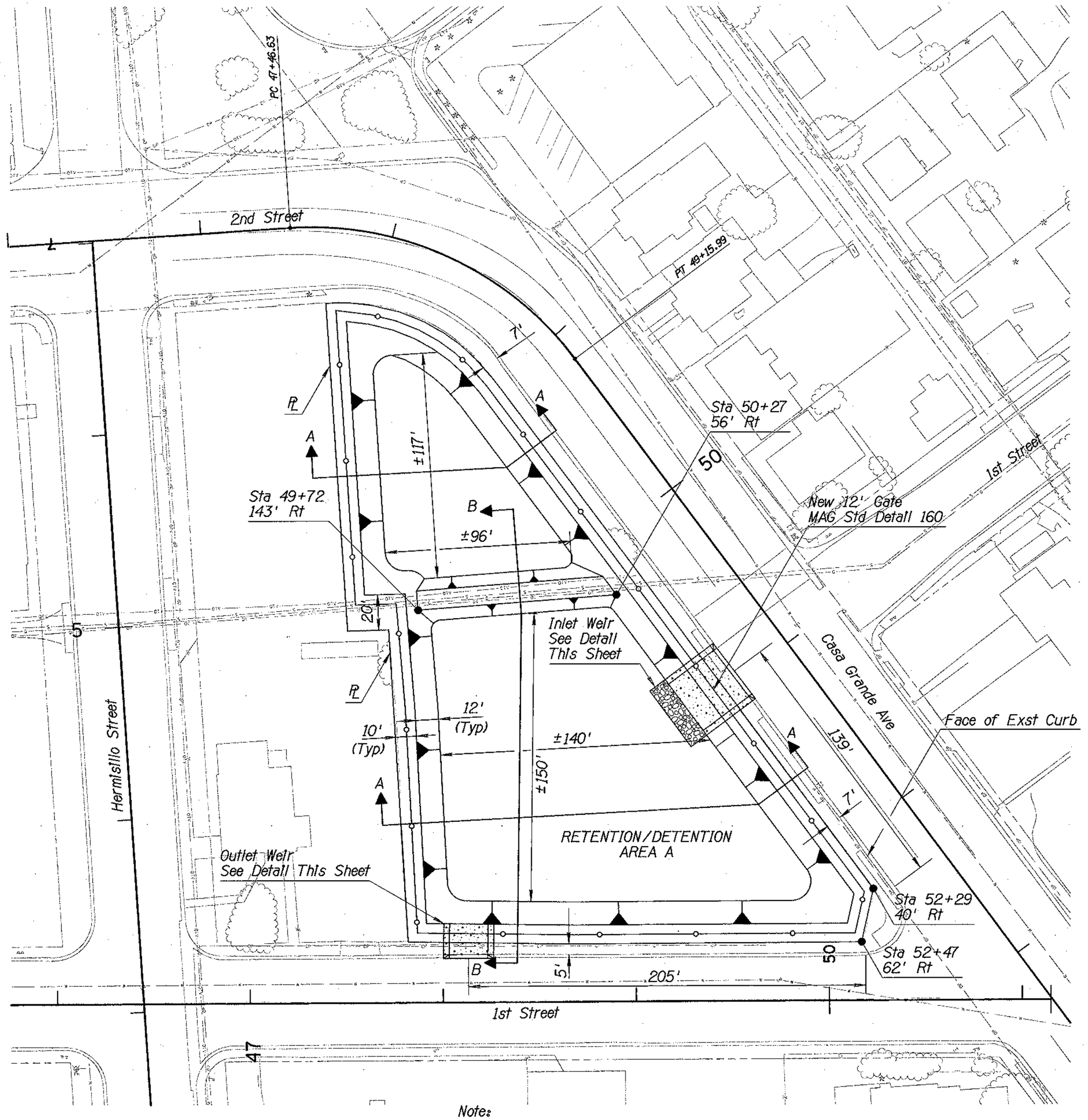

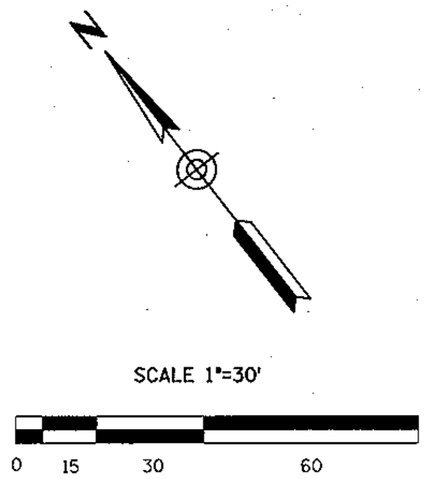

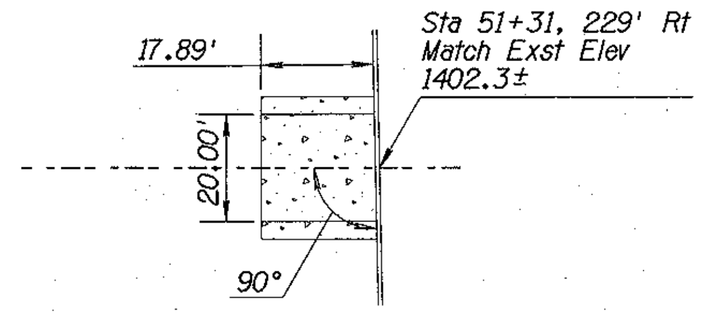

OUTLET WEIR DETAIL
NTS

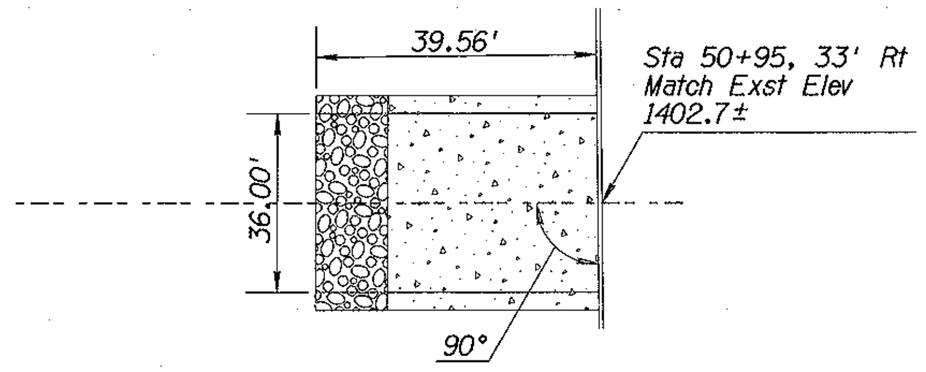

INLET WEIR DETAIL
NTS

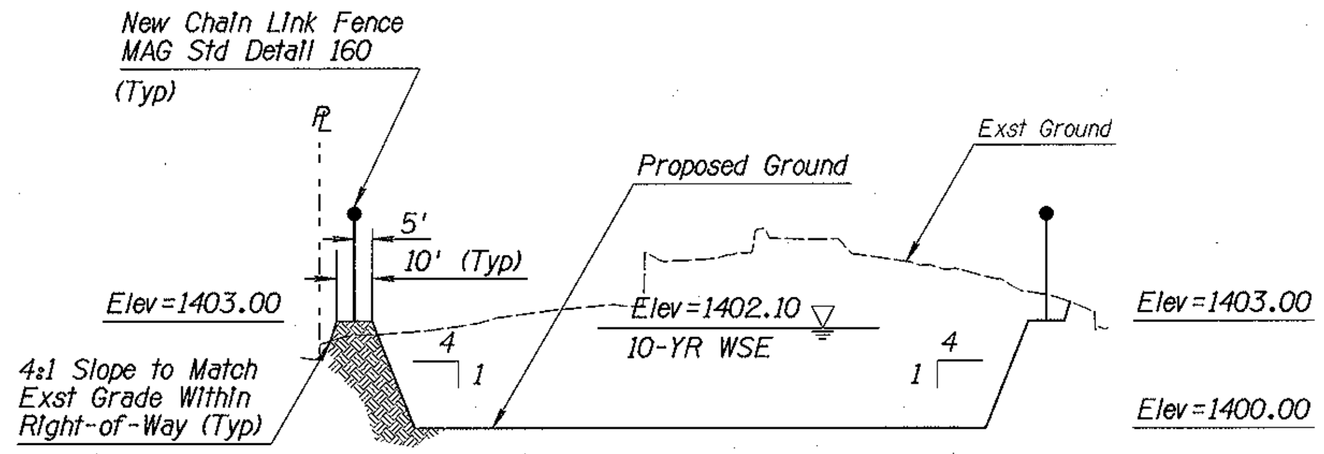

SECTION A-A
NTS

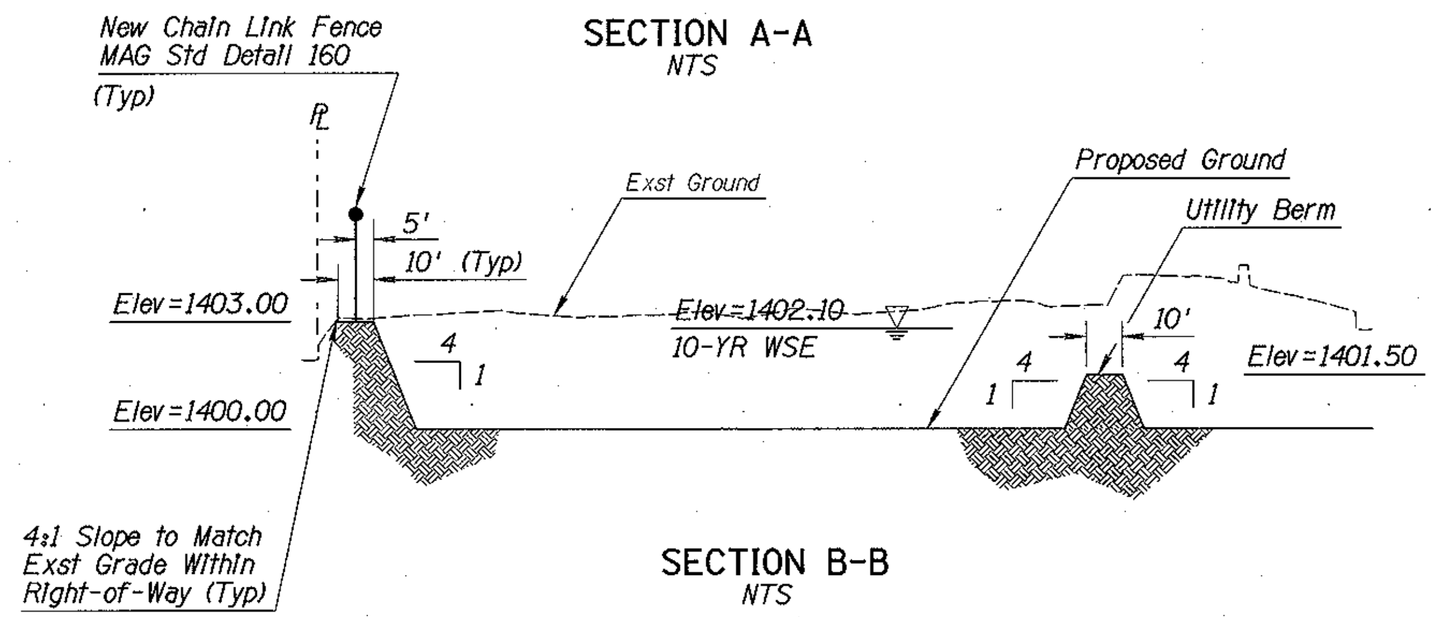

SECTION B-B
NTS

Note:

Contractor to verify limits of City of Casa Grande property/easement prior to construction. No construction shall occur on private property.

Two working days before you dig.
CALL FOR THE BLUE STAKES
1-800-782-5348
Blue Stake Center

NO.	DESCRIPTION OF REVISION	MADE BY	DATE

	NAME	DATE
DESIGN	JAS	02/07
DRAWN	ETB, RLH, JMS, SC	02/07
CHECKED	MHB, EGM, WDS	02/07

City of Casa Grande
510 East Florence Blvd
Casa Grande, Arizona 85222

DMJM HARRIS | AECOM

RETENTION/DETENTION AREA A

PROJECT NAME
DOWNTOWN STREETS - PHASE I

REGISTERED PROFESSIONAL ENGINEER (CIVIL)
CERTIFICATE NO. 20959
JOHN P VAN ECHO
2-7-07
ARIZONA U.S.A.

DWG NO. D-3.1
Sheet No.
40 of 93

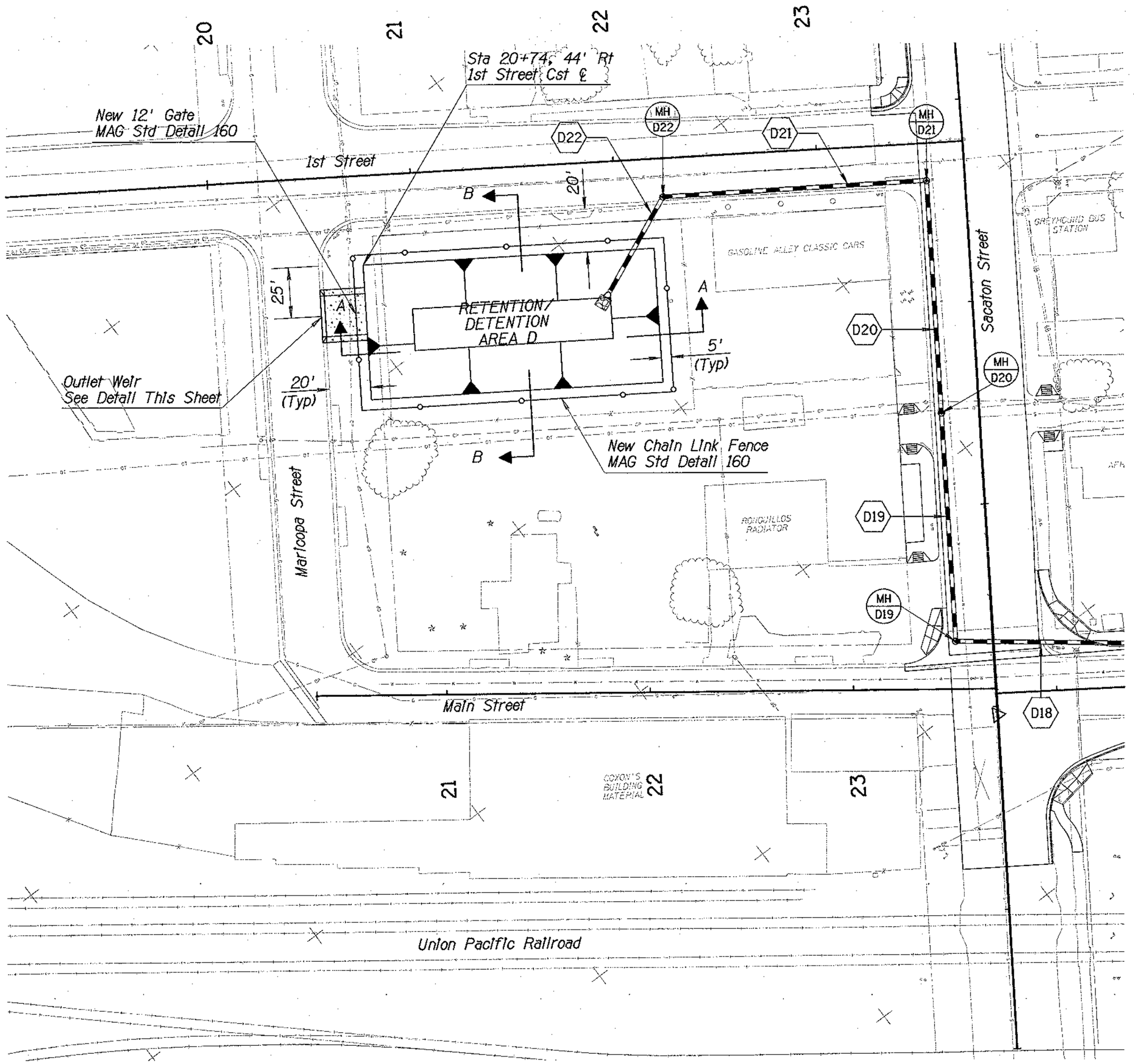

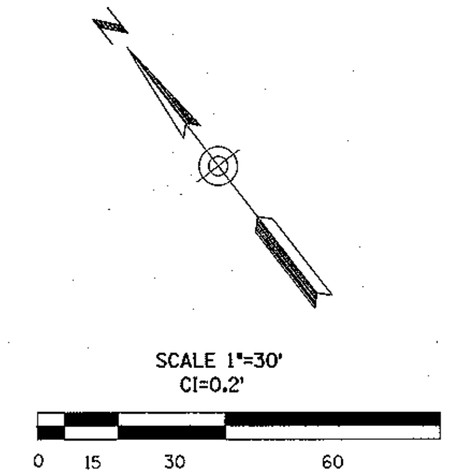

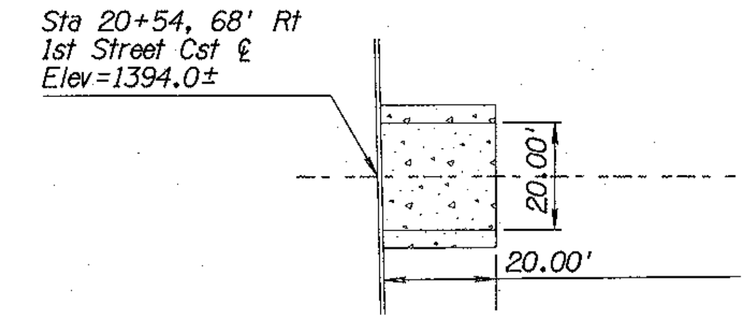

OUTLET WEIR DETAIL
NTS

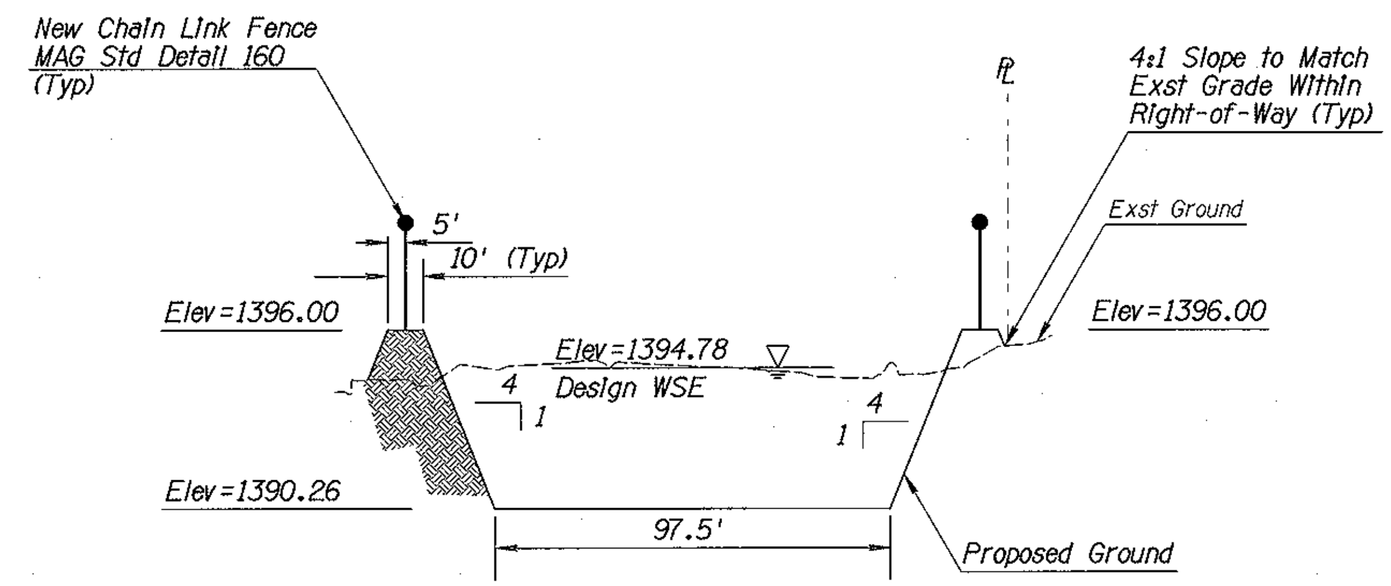

SECTION A-A
NTS

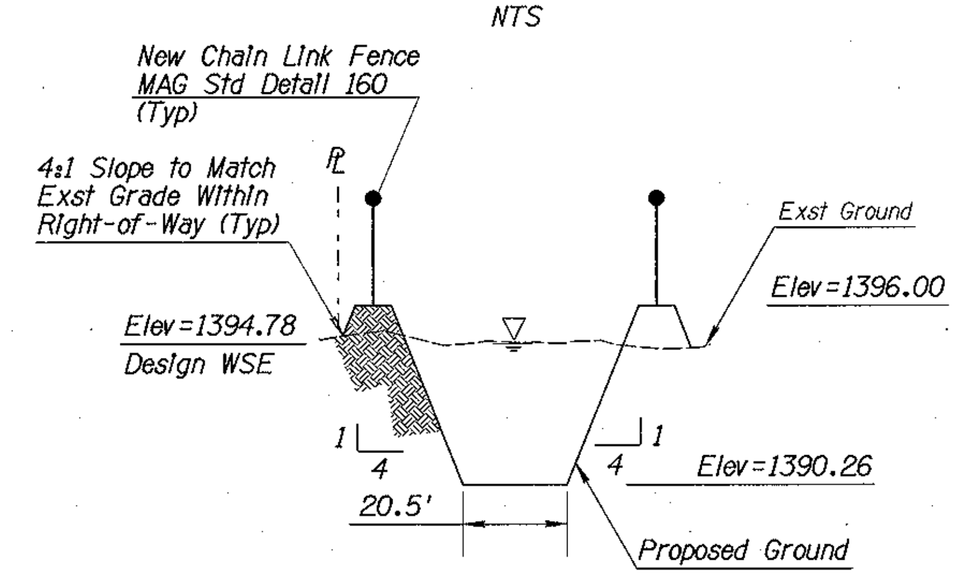

SECTION B-B
NTS

Note:

Contractor to verify limits of City of Casa Grande property/easement prior to construction. No construction shall occur on private property.

Two working days before you dig.
CALL FOR THE BLUE STAKES
1-800-782-5348
Blue Stake Center

NO.	DESCRIPTION OF REVISION	MADE BY	DATE

	NAME	DATE
DESIGN	JAS	02/07
DRAWN	ETB, RLH, JMS, SC	02/07
CHECKED	MHB, EGM, WDS	02/07

DMJM HARRIS | AECOM

City of Casa Grande
510 East Florence Blvd
Casa Grande, Arizona 85222

RETENTION/DETENTION AREA D

PROJECT NAME
DOWNTOWN STREETS - PHASE I

REGISTERED PROFESSIONAL ENGINEER (CIVIL)
CERTIFICATE NO. 20959
JOHN P VAN ECHO
Date Signed 2-7-07

DWG NO. D-3.2
Sheet No.
41 of 93

SIGNING NOTES:

1. ALL SIGNS SHALL BE IN COMPLIANCE WITH THE MANUAL ON UNIFORM TRAFFIC CONTROL DEVICES (MUTCD), ADOT SIGNING AND MARKING STANDARDS, TRAFFIC ENGINEERING MANUAL OF APPROVED SIGNS, THESE PLANS, AND THE SPECIAL PROVISIONS.
2. SIGNING MAY BE MODIFIED AS DIRECTED BY THE ENGINEER.
3. POST LENGTHS INDICATED ON SIGN SUMMARY SHEETS ARE APPROXIMATE. THE CONTRACTOR SHALL VERIFY ACTUAL POST LENGTHS.
4. ALL FACE OF BOLTS USED FOR MOUNTING SIGNS SHALL BE PAINTED THE SAME COLOR AS THE SIGN PANEL.
5. ALL SIGN LOCATIONS ARE APPROXIMATE. THE CONTRACTOR SHALL VERIFY ACTUAL SIGN LOCATIONS WITH THE ENGINEER PRIOR TO THE FOUNDATION EXCAVATION.
6. NORMAL MOUNTING HEIGHT FOR THE LOWEST SIGN ON THE POST SHALL BE SEVEN FEET FROM THE NEAREST SHOULDER EDGE ELEVATION. SIGNS SHALL BE MOUNTED A MINIMUM OF SEVEN FEET ABOVE THE GROUND LINE AT THE LOCATION OF THE SIGN POSTS.
7. NORMAL OFFSET FOR ALL SIGNS IS TWELVE FEET FROM THE NEAR EDGE OF THE SIGN TO THE EDGE OF PAVED SHOULDER UNLESS BEHIND A VERTICAL CURB OR OTHERWISE NOTED ON THE PLANS.
8. FLAT SHEET ALUMINUM PANELS WITH REFLECTIVE SHEETING AND DIRECT APPLIED CHARACTERS SHALL BE MADE PER SECTION 608-2.09 OF THE ADOT STANDARD SPECIFICATIONS.
9. EXISTING SIGNS NOT INDICATED ON SIGNING PLANS, THAT DO NOT NEED TO BE REMOVED OR RELOCATED, SHALL REMAIN. IF CONSTRUCTION ACTIVITIES REQUIRE THE REMOVAL OF SIGNS, THE SIGNS SHALL BE REINSTALLED AS NEAR AS POSSIBLE TO THE EXISTING LOCATION, AS DIRECTED BY THE ENGINEER. THE REMOVAL / REINSTALLATION OF SIGNS FOR ANY CONSTRUCTION ACTIVITY SHALL BE INCLUDED IN THE COST OF THAT ACTIVITY. NO FURTHER COMPENSATION SHALL BE MADE.
10. ANY EXISTING WOODEN SIGNS AND POSTS THAT ARE REMOVED SHALL BECOME THE PROPERTY OF THE CONTRACTOR.
11. SIGN PANELS SHOWN TO BE RELOCATED SHALL BE INSTALLED ON NEW POSTS. EXISTING POSTS & FOUNDATIONS SHALL BE REMOVED.

SIGN QUANTITIES

DESCRIPTION	UNITS	QUANTITIES
Sign Post (P-1) (Perforated Single)	lin. ft.	495
Post Foundations for Sign Post (P-1) (Perforated)	each	48
Regulatory, Warning or Marker Sign Panel Type III Sheeting	sq. ft.	250
Flat Sheet Aluminum Panel w/Std Reflective Sheeting & Demountable Characters	sq. ft.	61
Delineators (Type 3 Object Marker)	each	3
Remove or Relocate Signs	each	38

NO.	DESCRIPTION OF REVISION	MADE BY	DATE

	NAME	DATE
DESIGN	PSP, EGM	02/07
DRAWN	WBE	02/07
CHECKED	SCB, WDS	02/07

City of Casa Grande
510 East Florence Blvd
Casa Grande, Arizona 85222

DMJM HARRIS | AECOM

SIGNING
NOTES & QUANTITIES

REGISTERED PROFESSIONAL ENGINEER (CIVIL)
CERTIFICATE NO. 20959
JOHN P VAN ECHO
2-7-07
ARIZONA U.S.A.

PROJECT NAME
DOWNTOWN STREETS - PHASE I

DWG NO. T-1.1

Sheet No.
42 of 93

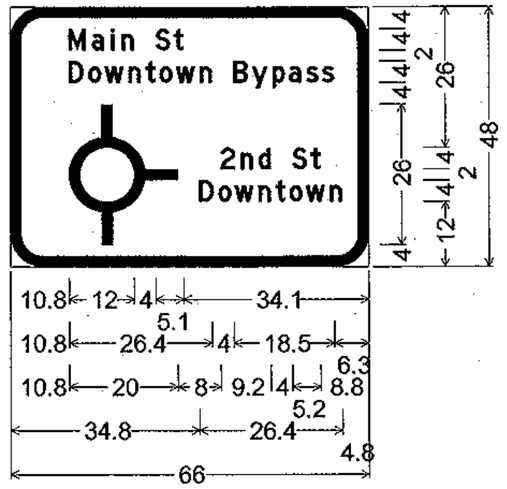

6.0" Radius, 2.0" Border, White on Green;
[Main St] D;
[Downtown Bypass] D;
Roundabout symbol;
[2nd St] D; [Downtown] D;
Table of widths and spaces.

10.8	M 3.1	1.2	a 2.2	1.3	i 0.6	1.4	n 2.2	

4.0	S 2.7	0.7	t 1.7	34.1

10.8	D 2.7	0.9	o 2.3	0.7	w 3.5	0.9	n 2.3	0.9	t 1.8	0.7	o 2.3	0.7	w 3.5	1.0	n 2.2				

4.0	B 2.7	0.7	y 2.9	1.0	p 2.2	0.7	a 2.3	0.9	s 2.3	0.6	s 2.2	6.3		

10.8	⌖ 20.0	

8.0	2 2.7	1.0	n 2.3	1.0	d 2.2

4.0	S 2.7	0.7	t 1.8	8.8

34.8	D 2.7	0.9	o 2.3	0.7	w 3.5	0.9	n 2.2	1.0	t 1.7	0.8	o 2.3	0.7	w 3.5	0.9	n 2.3	4.8			

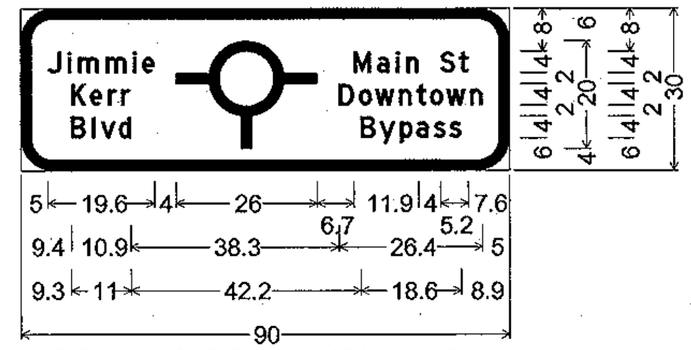

6.0" Radius, 2.0" Border, White on Green;
[Jimmie] D; [Kerr] D; [Blvd] D;
Roundabout symbol; [Main St] D;
[Downtown] D; [Bypass] D;
Table of widths and spaces.

5.0	J 2.5	1.2	i 0.6	1.3	m 3.8	1.3	m 3.7	1.3	i 0.7	1.0	e 2.2	

4.0	⌖ 26.0	

6.7	M 3.1	1.1	a 2.3	1.3	i 0.6	1.3	n 2.2

4.0	S 2.7	0.7	t 1.8	7.6	

9.4	K 2.7	0.7	e 2.2	1.1	r 1.7	0.8	r 1.7

38.3	D 2.7	0.9	o 2.3	0.7	w 3.5	0.9	n 2.3	0.9	t 1.8	0.7	o 2.4	0.6	w 3.5	1.0	n 2.2	5.0			

9.3	B 2.7	1.2	l 0.6	1.0	v 2.7	0.6	d 2.2

42.2	B 2.7	0.8	y 2.9	0.9	p 2.3	0.7	a 2.2	1.0	s 2.2	0.7	s 2.2	8.9		

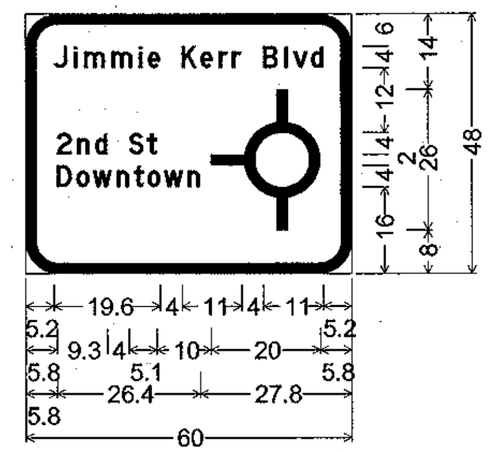

6.0" Radius, 2.0" Border, White on Green;
[Jimmie Kerr Blvd] D;
[2nd St] D; [Downtown] D;
Roundabout symbol;
Table of widths and spaces.

5.2	J 2.5	1.2	i 0.6	1.3	m 3.8	1.3	m 3.7	1.3	i 0.7	1.0	e 2.2	

4.0	K 2.8	0.7	e 2.2	1.1	r 1.7	0.8	r 1.7	

4.0	B 2.6	1.3	l 0.6	0.9	v 2.7	0.7	d 2.2	5.2

5.8	2 2.7	1.0	n 2.3	1.0	d 2.3	

4.0	S 2.6	0.8	t 1.7	

10.0	⌖ 20.0	5.8

5.8	D 2.7	0.9	o 2.3	0.7	w 3.5	0.9	n 2.2	1.0	t 1.7	0.8	o 2.3	0.7	w 3.5	0.9	n 2.3	27.8			

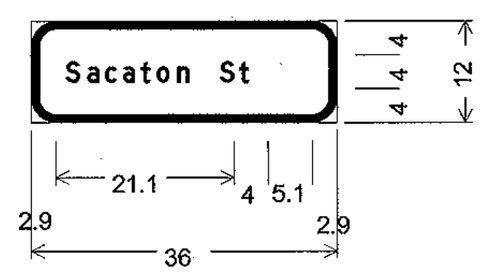

3.0" Radius, 1.0" Border, White on Green;
[Sacaton St] D;

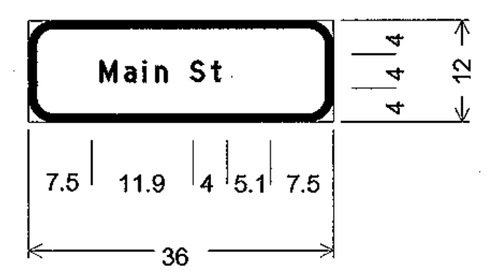

3.0" Radius, 1.0" Border, White on Green;
[Main St] D;

SIGNING NOTES:

1. *ALL SIGNS HAVE TYPE III SHEETING WITH A REFLECTORIZED GREEN BACKGROUND. ALL SIGN LEGENDS SHALL BE WHITE REFLECTORIZED DE MOUNTABLE CHARACTERS WITH TYPE P SHEETING AND E(MOD) ALPHABET, UNLESS OTHERWISE NOTED.*

2. *ALL DIMENSIONS ARE IN INCHES.*

Two working days before you dig.
CALL FOR THE BLUE STAKES
1-800-782-5348
Blue Stake Center

NO.	DESCRIPTION OF REVISION	MADE BY	DATE

	NAME	DATE
DESIGN	PSP, EGM	02/07
DRAWN	WBE	02/07
CHECKED	SCB, WDS	02/07

DMJM HARRIS | AECOM

City of Casa Grande
510 East Florence Blvd
Casa Grande, Arizona 85222

SIGNING FORMAT SHEET
MAIN ST/CASA GRANDE AVE
ROUNDABOUT SIGNS

REGISTERED PROFESSIONAL ENGINEER (CIVIL)
CERTIFICATE NO. 20959
JOHN P VAN ECHO
2-7-07
ARIZONA U.S.A.

PROJECT NAME
DOWNTOWN STREETS - PHASE I

DWG NO. T-2.1
Sheet No.
43 of 93

Station	Sign Code	New	Existing/Remain	Existing/Modify	Relocate	Remove	Legend	Width (in)	Height (in)	Area (sq. ft.)	Type	# Foundations	Type	Total Length (ft)
23+31	R1-1		X				Stop							
24+15	D3					X	MAIN ST							
24+15	D3					X	SACATON ST							
24+17	D3	X					MAIN ST	36	12	3.0	F-DA			
24+17	D3	X					SACATON ST	36	12	3.0	F-DA			
24+17	R1-1	X					Stop	30	30	6.3	R	1	P-1	10.0
24+20	R1-1					X	Stop							
25+67	W10-2	X					Highway Grade Crossing Advanc	30	30	6.3	W	1	P-1	10.5
27+66	I20-2a			X			Private Property							
28+12	W10-2	X					Highway Grade Crossing Advanc	30	30	6.3	W	1	P-1	10.5
29+49	I20-2a		X				Private Property							
29+58	R1-1					X	Stop							
29+76	D3					X	MAIN ST							
29+76	D3					X	FLORENCE ST							
13+38	D11-1					X	Bike Route (Symbol)							
13+38	D5-9					X	Arrow (Symbol)							
13+25	W10-1		X				RAILROAD CROSSING							
13+15	D11-1					X	Bike Route (Symbol)							
13+05	R8-8					X	DO NOT STOP ON TRACKS							
12+91	R8-8	X					DO NOT STOP ON TRACKS	24	30	5.0	R	1	P-1	9.5
30+31	R1-1					X	Stop							
30+83	R2-1(25)		X				Speed Limit - 25 mph							
31+84	W10-2	X					Highway Grade Crossing Advanc	30	30	6.3	W	1	P-1	10.5
32+65	R2-1(25)		X				Speed Limit - 25 mph							
32+89	D3				X		MAIN ST							
32+89	D3				X		MARSHALL ST							
32+89	R1-1				X		Stop	30	30	6.3	R	1	P-1	10.0
39+52	R1-1				X		Stop	30	30	6.3	R	1	P-1	10.0
40+09	D3				X		MAIN ST							
40+09	D3				X		N DRY LAKE ST							
40+09	D3					X	DRY LAKE ST							
45+83	R2-1(25)		X				Speed Limit - 25 mph							
46+16	R1-1		X				Stop	30	30	6.3	R	1	P-1	10.0
46+16	D3		X				MAIN ST							
46+16	D3		X				HERMOSILLA ST							
46+18	W10-1				X		RAILROAD CROSSING					1	P-1	11.0
46+77	R1-2				X		YIELD	36	36	3.9	R	1	P-1	9.5
47+78	W2-6 Mod	X					Circular Intersection Sign	48	48	16.0	W	2	P-1	26.0
47+78	W13-1 (20)	X					20 MPH Plaque	24	24	4.0	W			
47+78	W3-1a					X	STOP AHEAD w/ Specialty Sign							
49+48	-	X					Jimmie Kerr Blvd 2nd St Downtown	60	48	20.0	F-DA	2	P-1	22.0
50+55	R4-7	X					Keep Right (Symbol)	36	48	12.0	R	2	P-1	22.0
50+55	OM-3L	X					Type 3 Object Marker	12	36	3.0	M			
50+77	R6-1R	X					One Way Enclosed in Right Arrow	36	12	3.0	R	1	P-1	8.0
51+00	R6-1R	X					One Way Enclosed in Right Arrow	36	12	3.0	R	1	P-1	8.0
51+78	R1-2	X					YIELD	36	36	3.9	R	1	P-1	9.5
51+89	W2-6 Mod	X					Circular Intersection Sign	48	48	16.0	W	2	P-1	26.0
51+89	W13-1 (20)	X					20 MPH Plaque	24	24	4.0	W			
52+30	R6-1R	X					One Way Enclosed in Right Arrow	36	12	3.0	R	1	P-1	8.0
52+33	R6-1R	X					One Way Enclosed in Right Arrow	36	12	3.0	R	1	P-1	8.0
52+52	R1-1					X	Stop							
52+78	D3					X	CASA GRANDE AVE							
52+78	D3					X	JIMMIE KERR BLVD							
52+88	R6-1R	X					One Way Enclosed in Right Arrow	36	12	3.0	R	1	P-1	8.0

Station	Sign Code	New	Existing/Remain	Existing/Modify	Relocate	Remove	Legend	Width (in)	Height (in)	Area (sq. ft.)	Type	# Foundations	Type	Total Length (ft)
53+93	-	X					Jimmie Kerr Blvd Main St Downtown Bypass	90	30	18.8	F-DA	2	P-1	19.0
54+17	R4-7	X					Keep Right (Symbol)	36	48	12.0	R	2	P-1	22.0
54+17	OM-3L	X					Type 3 Object Marker	36	12	3.0	M			
54+26	M4-5		X				TO							
54+26	M1-1a		X				INTERSTATE ARIZONA 10							
54+26	M6-2(L)		X				Arrow (Symbol)							
54+43	W11-2	X					Pedestrian Trafffic	36	36	9.0	W	1	P-1	11.5
54+63	W1-1L					X	Left Turn							
54+63	W13-1 (20)					X	20 MPH							
54+91	R6-1R	X					One Way Enclosed in Right Arrow	36	12	3.0	R	1	P-1	8.0
54+91	R6-1R	X					One Way Enclosed in Right Arrow	36	12	3.0	R			
54+67	W11-2	X					Pedestrian Trafffic	36	36	9.0	W	1	P-1	11.5
55+75	R1-2	X					YIELD	36	36	3.9	R	1	P-1	9.5
20+18	D3					X	DOAN ST							
20+18	D3					X	CASA GRANDE AVE							
20+26	R1-1					X	Stop							
20+31	R1-2	X					YIELD	36	36	3.9	R	1	P-1	9.5
20+80	R6-1R	X					One Way Enclosed in Right Arrow	36	12	3.0	R	1	P-1	8.0
21+22	R4-7	X					Keep Right (Symbol)	36	48	12.0	R	2	P-1	22.0
21+22	OM-3L	X					Type 3 Object Marker	36	12	3.0	M			
21+41	-		X				LITTERING STREETS UNLAWFUL							
22+23	-	X					Main St Downtown 2nd St Downtown	66	48	22.0	F-DA	2	P-1	22.0
22+37	W1-1R					X	Right Turn							
22+37	W13-1 (20)					X	20 MPH							
23+73	W2-6 Mod	X					Circular Intersection Sign	48	48	16.0	W	2	P-1	26.0
23+73	W13-1 (20)	X					20 MPH	24	24	4.0	W			
13+34	R8-8	X					DO NOT STOP ON TRACKS	24	30	5.0	R	1	P-1	9.5
13+36	R8-8					X	DO NOT STOP ON TRACKS							
13+41	W10-1					X	RAILROAD CROSSING							
14+67	W10-1	X					RAILROAD CROSSING	36	36	7.1	W	1	P-1	10.0
14+88	W10-1					X	RAILROAD CROSSING							
14+95	D9-6					X	Handicap Accessible							
15+74	R7-107				X		No Parking Bus Stop					1	P-1	8.5
16+36	R7-107				X		No Parking Bus Stop					1	P-1	11.0
16+36	-				X		Specialty Signs							
16+49	R1-1		X				Stop							
17+06	R1-1				X		Stop				R	1	P-1	9.5
17+09	D3		X				W 1st ST							
17+09	D3		X				SACATON ST							
23+17	R1-2	X					YIELD	36	36	3.9	R	1	P-1	9.5
22+39	R3-7R	X					Right Lane Must Turn Right	30	30	6.3	R	1	P-1	9.5
50+55	M4-5	X					TO (white on blue)	24	12	2.0	M	1	P-1	11.5
50+55	M1-1a	X					INTERSTATE ARIZONA 10	24	24	4.0	M			
50+55	M6-3	X					Arrow (Symbol) (white on blue)	24	18	3.0	M			

Two working days before you dig.
CALL FOR THE BLUE STAKES
1-800-782-5348
Blue Stake Center

NO.	DESCRIPTION OF REVISION	MADE BY	DATE

	NAME	DATE
DESIGN	PSP, EGM	02/07
DRAWN	WBE	02/07
CHECKED	SCB, WDS	02/07

City of Casa Grande
510 East Florence Blvd
Casa Grande, Arizona 85222

DMJM HARRIS | AECOM

SIGN SUMMARY SHEET

REGISTERED PROFESSIONAL ENGINEER (CIVIL) CERTIFICATE NO. 20959 JOHN P VAN ECHO Date Signed 2-7-07 ARIZONA U.S.A.

DWG NO. T-2.2

PROJECT NAME
DOWNTOWN STREETS - PHASE I

Sheet No.
44 of 93

PAVEMENT MARKING GENERAL NOTES:

1. IT IS THE CONTRACTOR'S RESPONSIBILITY TO ENSURE THAT THE FINAL AC SURFACE COURSE IS PLACED SO THAT THE PAVEMENT MARKING IS OFFSET A MINIMUM OF SIX INCHES CLEAR OF THE CONSTRUCTION JOINT, UNLESS OTHERWISE DIRECTED BY THE ENGINEER.

2. AT THE COMPLETION OF THE FINAL AC OR ACFC PAVEMENT SURFACE EACH DAY, THE CENTERLINES, LANE LINES AND EDGE LINES SHALL BE STRIPED WITH ONE APPLICATION OF STANDARD REFLECTORIZED TRAFFIC PAINT AT THE LOCATION OF THE PERMANENT STRIPING.

3. THE CONTRACTOR SHALL BE RESPONSIBLE FOR THE LAYOUT AND INSTALLATION OF PERMANENT PAVEMENT MARKING ON THE FINAL SURFACE COURSE, FOLLOWING CONTROL POINTS THAT HAVE BEEN SET NO MORE THAN 50 FEET APART ALONG THE LINES TO BE MARKED.

4. THE DIMENSIONS SHOWN TO PAVEMENT MARKINGS ARE TO THE CENTER OF THE PAVEMENT MARKING, OR IN THE CASE OF DOUBLE PAVEMENT MARKING, TO THE CENTER OF THE DOUBLE PAVEMENT MARKING.

5. PRIOR TO APPLYING THE THERMOPLASTIC MARKING LINES, AT LEAST ONE APPLICATION OF STANDARD REFLECTORIZED TRAFFIC PAINT SHALL BE APPLIED TO ALL LOCATIONS, INCLUDING PARALLEL PARKING AREAS, ON THE FINAL PAVEMENT SURFACES. THIS PAINT SHALL CURE A MINIMUM OF 2 WEEKS BEFORE THE THERMOPLASTIC MATERIAL IS APPLIED.

6. ALL FINAL PAVEMENT MARKINGS SHALL BE 60 MIL (0.060 INCH) THICK HOT-SPRAYED THERMOPLASTIC REFLECTORIZED PAVEMENT MARKING, AS DIRECTED BY THE ENGINEER.

7. ALL STOPBARS, CROSSWALKS, ARROWS AND LEGENDS SHALL BE 90 MIL (0.090 INCH) THICK ALKYD THERMOPLASTIC.

8. THE CONTRACTOR SHALL CLEAN THE ROADWAY SURFACE TO THE SATISFACTION OF THE ENGINEER, BY SWEEPING AND AIR JET BLOWING, IMMEDIATELY PRIOR TO THE PLACEMENT OF ALL PAVEMENT MARKINGS. THE ROADWAY SURFACE SHALL BE DRY, THE AIR AND PAVEMENT TEMPERATURES SHALL NOT BE LESS THAN 55° F FOR THE PLACEMENT OF THERMOPLASTIC PAVEMENT MARKINGS.

9. WHEN PAVEMENT MARKING OBLITERATION IS NECESSARY, IT SHALL BE ACCOMPLISHED BY APPROVED METHODS. PAINTING OVER PAVEMENT MARKING DOES NOT CONSTITUTE PAVEMENT MARKING OBLITERATION. TRAFFIC PAINT SHALL BE OBLITERATED BY A METHOD THAT IS IN COMPLIANCE WITH OSHA'S 29 CFR, PART 1926, LEAD EXPOSURE IN CONSTRUCTION; INTERIM FINAL RULE. IF LEAD EXPOSURE PREVENTION MEASURES ARE REQUIRED, THE CONTRACTOR SHALL ENSURE THAT ALL PERSONNEL PRESENT ON THE JOB SITE ARE NOTIFIED OF THE ACTIVITY AND ADVISED OF NECESSARY PRECAUTIONS TO BE TAKEN TO AVOID CONTAMINATION BY LEAD COMPOUNDS. THE CONTRACTOR SHALL SUBMIT A LEAD EXPOSURE PREVENTION PLAN TO THE ENGINEER FOR REVIEW, A MINIMUM OF 48 HOURS PRIOR TO THE START OF ANY PAVEMENT MARKING OBLITERATION ACTIVITIES.

10. THE PAVEMENT MARKING DRAWINGS ARE SCHEMATIC ONLY AND NOT TO SCALE. THE CONTRACTOR SHALL FOLLOW ALL DIMENSIONS, DETAILS AND STANDARDS WHEN INSTALLING PAVEMENT MARKINGS.

11. THE PERMANENT PAVEMENT MARKING PLANS MAY BE MODIFIED AS DIRECTED BY THE ENGINEER.

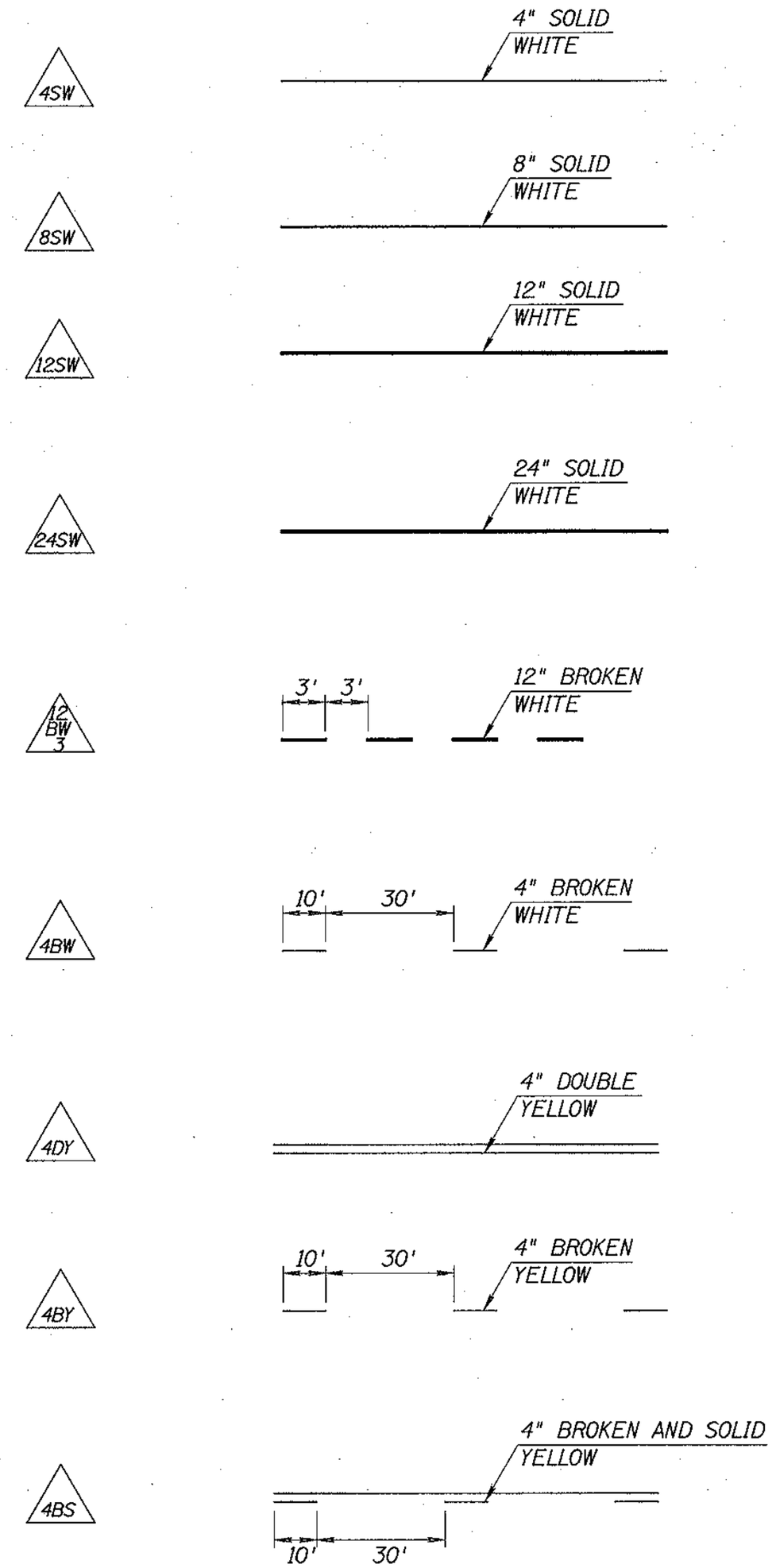

PAVEMENT MARKING QUANTITIES			
ITEM		UNITS	QUANTITIES
THERMOPLASTIC PAVEMENT MARKING (0.060")	4" WHITE	LF	8830
	4" YELLOW	LF	7600
THERMOPLASTIC PAVEMENT MARKING (TRANSVERSE) (ALKYD) (0.090")	PAVEMENT SYMBOLS (STD DWG M-10)	EACH	6
	LEGEND "ONLY" (STD DWG M-10)	EACH	3
	LEGEND "YIELD"	EACH	6
	TYPE D RAISED PAVEMENT MARKER	EACH	38

NO.	DESCRIPTION OF REVISION	MADE BY	DATE

	NAME	DATE
DESIGN	PSP, EGM	02/07
DRAWN	WBE	02/07
CHECKED	SCB, WDS	02/07

City of Casa Grande
510 East Florence Blvd
Casa Grande, Arizona 85222

DMJM HARRIS | AECOM

PAVEMENT MARKING NOTES & QUANTITIES

REGISTERED PROFESSIONAL ENGINEER (CIVIL) CERTIFICATE NO. 20959 JOHN P VAN ECHO Date Signed 3-7-07 ARIZONA U.S.A.

PROJECT NAME
DOWNTOWN STREETS - PHASE I

DWG NO. T-3.1.

Sheet No.
45 of 93

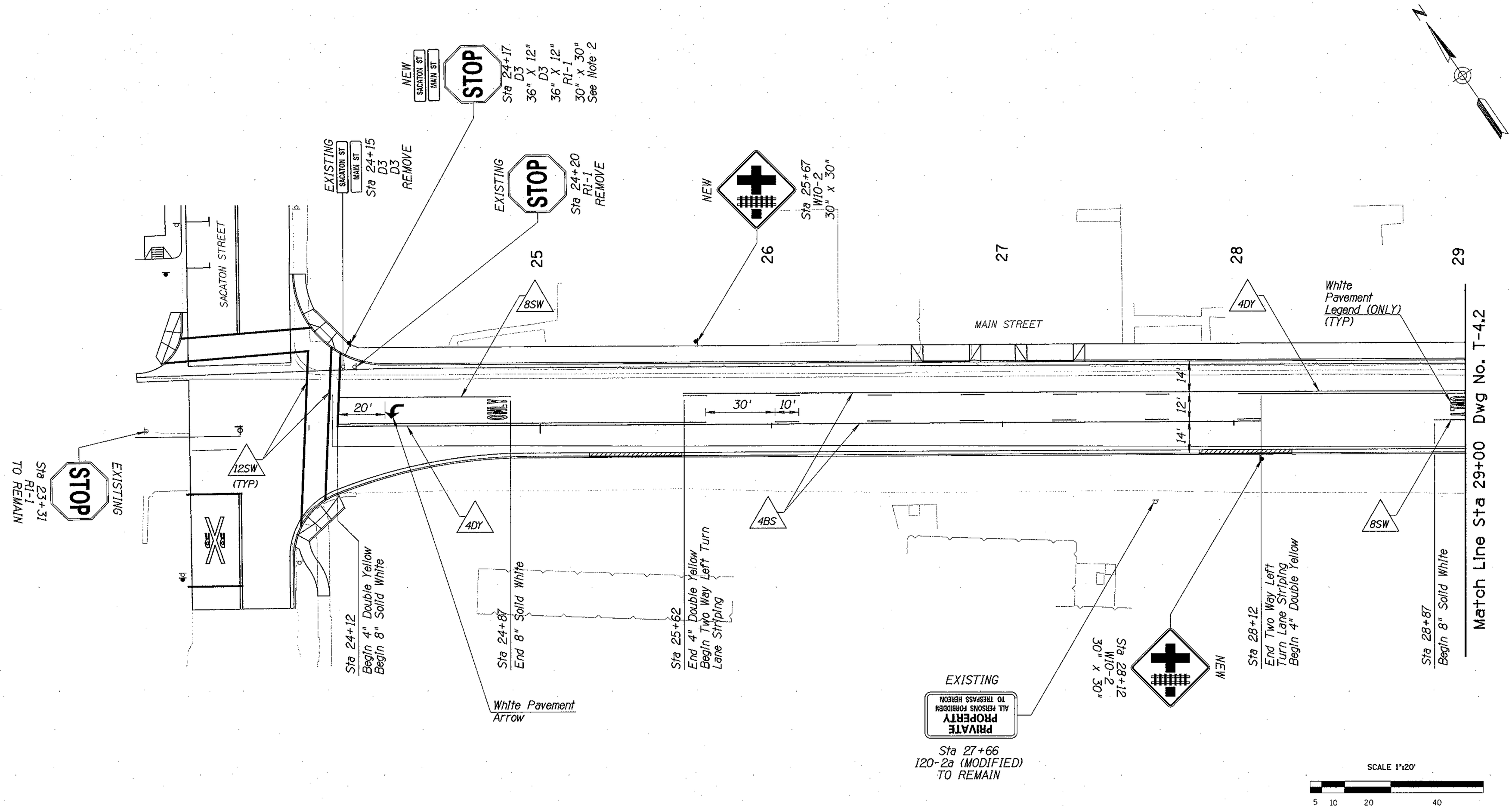

NOTE:

1. See Dwg No. T-4.8 for Parking Striping Layout.
2. See Dwg No. T-2.2 for D3 Sign Details.
3. See Dwg No. T-4.7 for Sacaton Siging & Striping.

Two working days before you dig.
CALL FOR THE BLUE STAKES
1-800-782-5348
Blue Stake Center

NO.	DESCRIPTION OF REVISION	MADE BY	DATE

	NAME	DATE
DESIGN	PSP, EGM	02/07
DRAWN	WBE	02/07
CHECKED	SCB, WDS	02/07

City of Casa Grande
510 East Florence Blvd
Casa Grande, Arizona 85222

DMJM HARRIS | AECOM

SIGNING AND STRIPING SHEET
MAIN STREET
STA 23+74.39 TO STA 29+00

REGISTERED PROFESSIONAL ENGINEER (CIVIL)
CERTIFICATE NO. 20959
JOHN P VAN ECHO
2-7-07
ARIZONA U.S.A.

PROJECT NAME
DOWNTOWN STREETS - PHASE I

DWG NO. T-4.1
Sheet No.
46 of 93

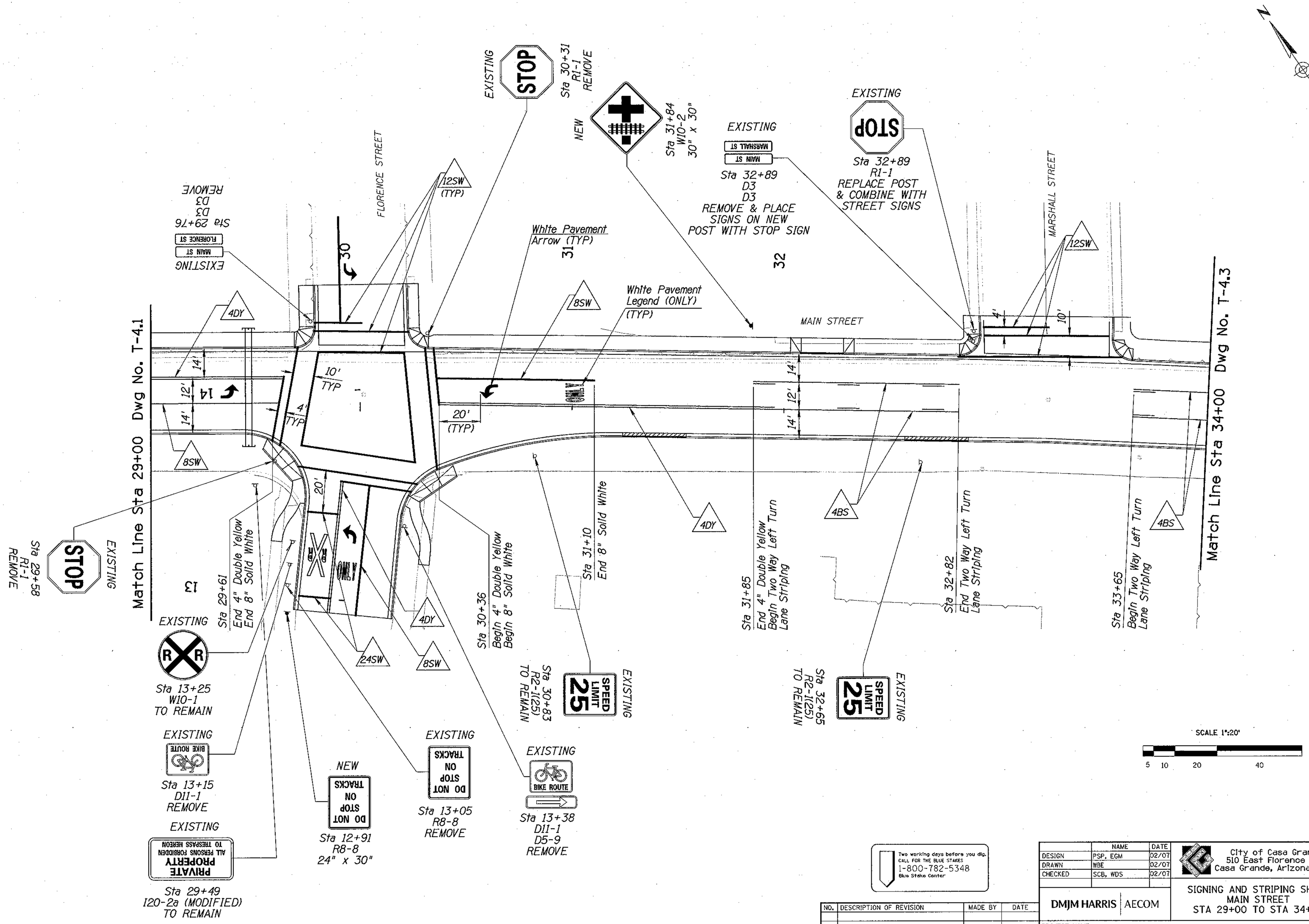

Two working days before you dig.
CALL FOR THE BLUE STAKES
1-800-782-5348
Blue Stake Center

NO.	DESCRIPTION OF REVISION	MADE BY	DATE

	NAME	DATE
DESIGN	PSP, EGM	02/07
DRAWN	WBE	02/07
CHECKED	SCB, WDS	02/07

City of Casa Grande
510 East Florence Blvd
Casa Grande, Arizona 85222

DMJM HARRIS | AECOM

SIGNING AND STRIPING SHEET
MAIN STREET
STA 29+00 TO STA 34+00

REGISTERED PROFESSIONAL ENGINEER (CIVIL)
CERTIFICATE NO. 20959
JOHN P VAN ECHO
Date Signed 3-7-07
Arizona U.S.A.

PROJECT NAME
DOWNTOWN STREETS - PHASE I

DWG NO. T-4.2
Sheet No.
47 of 93

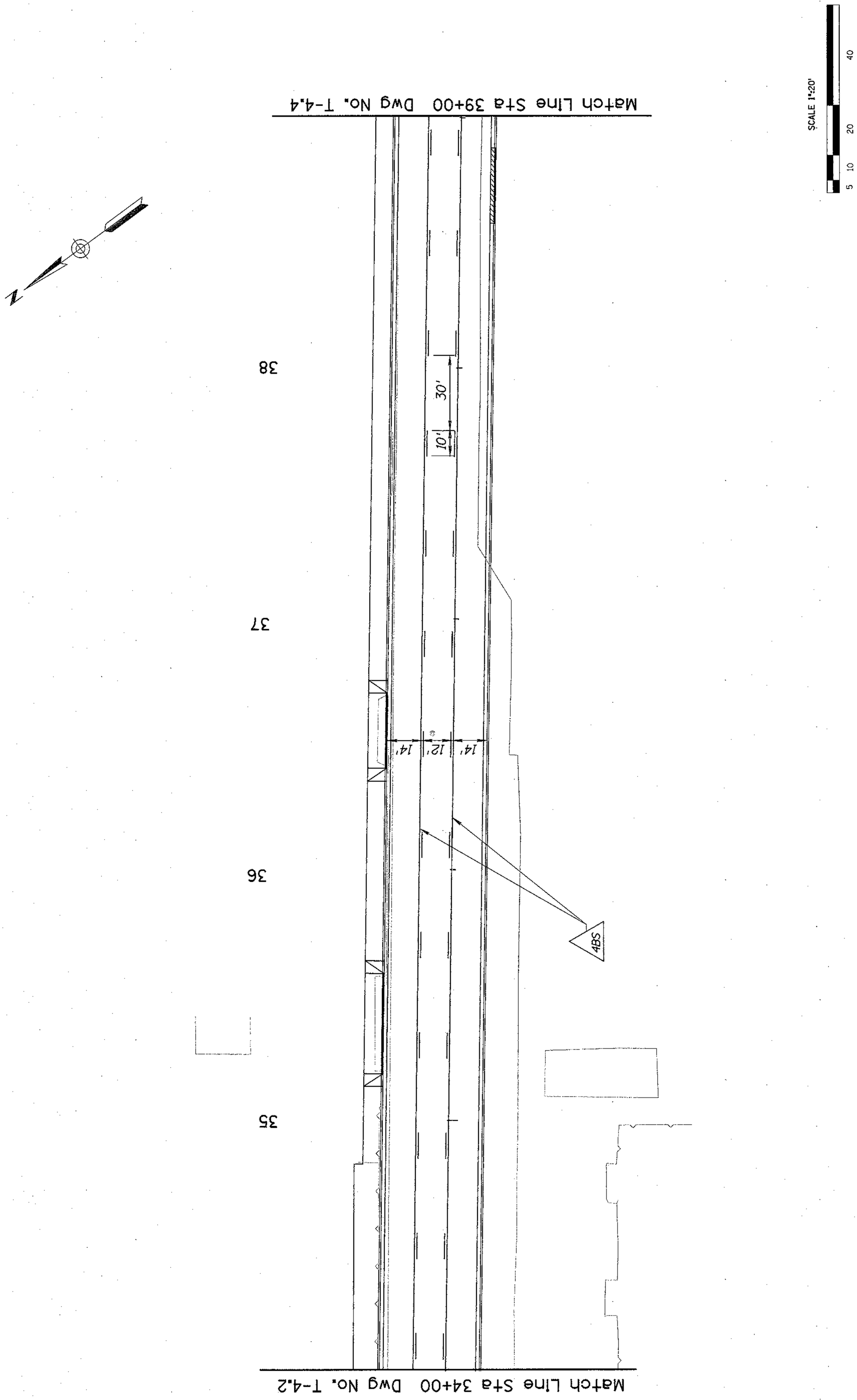

NO.	DESCRIPTION OF REVISION	MADE BY	DATE

Two working days before you dig.
CALL FOR THE BLUE STAKES
1-800-782-5348
Blue Stake Center

	NAME	DATE
DESIGN	PSP, EGM	02/07
DRAWN	WBE	02/07
CHECKED	SCB, WDS	02/07

DMJM HARRIS | AECOM

PROJECT NAME

DOWNTOWN STREETS - PHASE I

City of Casa Grande
510 East Florence Blvd
Casa Grande, Arizona 85222

SIGNING & STRIPING SHEET
MAIN STREET
STA 34+00 TO STA 39+00

REGISTERED PROFESSIONAL ENGINEER (CIVIL)
CERTIFICATE NO. 20959
JOHN P. VAN ECHO
Date Signed 2-7-07

DWG NO. T-4.3

Sheet No. 48 of 93

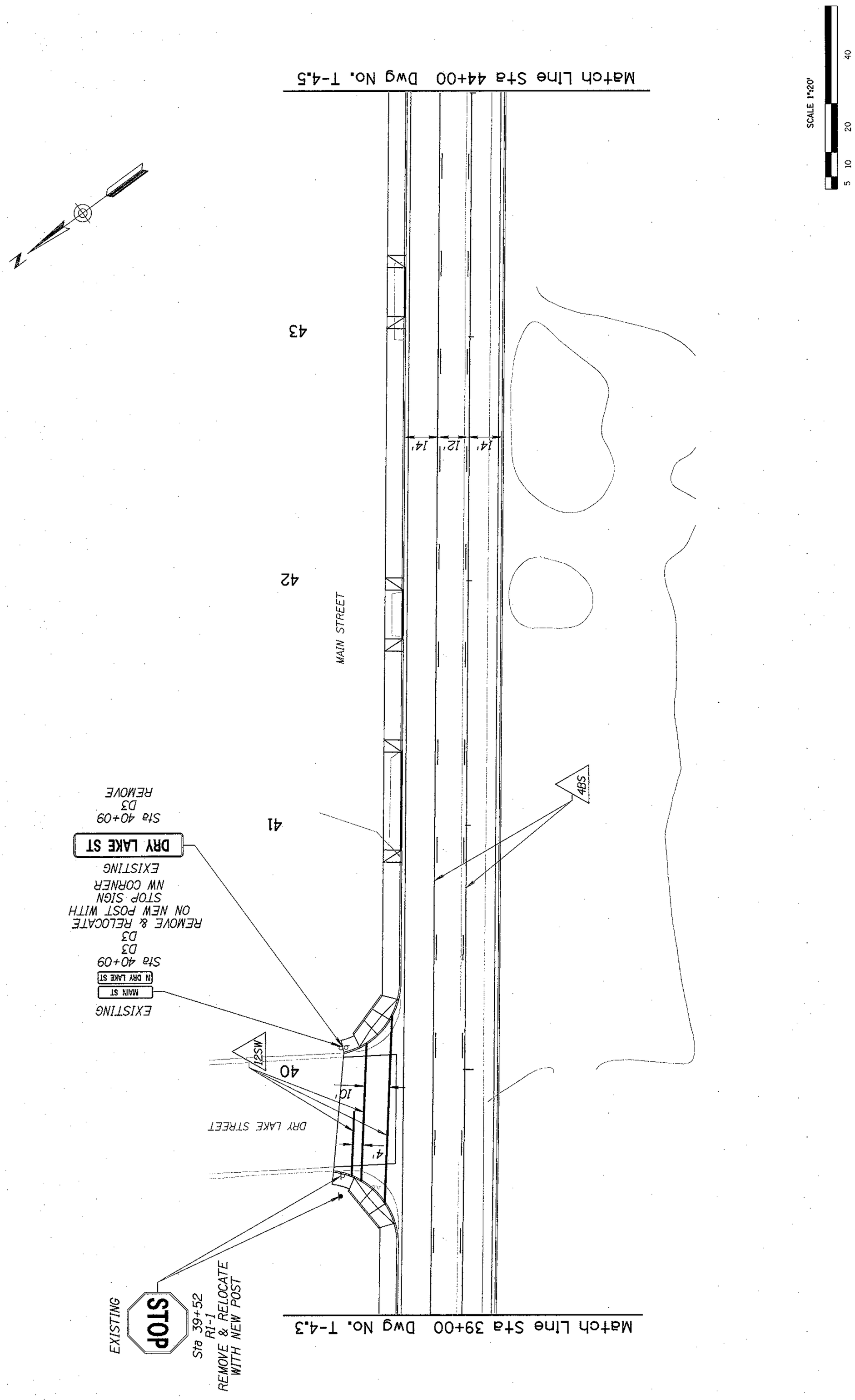

Two working days before you dig.
CALL FOR THE BLUE STAKES
1-800-782-5348
Blue Stake Center

NO.	DESCRIPTION OF REVISION	MADE BY	DATE

	NAME	DATE
DESIGN	PSP, EGM	02/07
DRAWN	WBE	02/07
CHECKED	SCB, WDS	02/07

DMJM HARRIS | AECOM

PROJECT NAME

DOWNTOWN STREETS - PHASE I

City of Casa Grande
510 East Florence Blvd
Casa Grande, Arizona 85222

SIGNING & STRIPING SHEET
MAIN STREET
STA 39+00 TO STA 44+00

REGISTERED PROFESSIONAL ENGINEER (CIVIL)
CERTIFICATE NO. 20959
JOHN P VAN ECHO
Date Signed 2-1-07
ARIZONA U.S.A.

DWG NO. T-4.4

Sheet No. 49 of 93

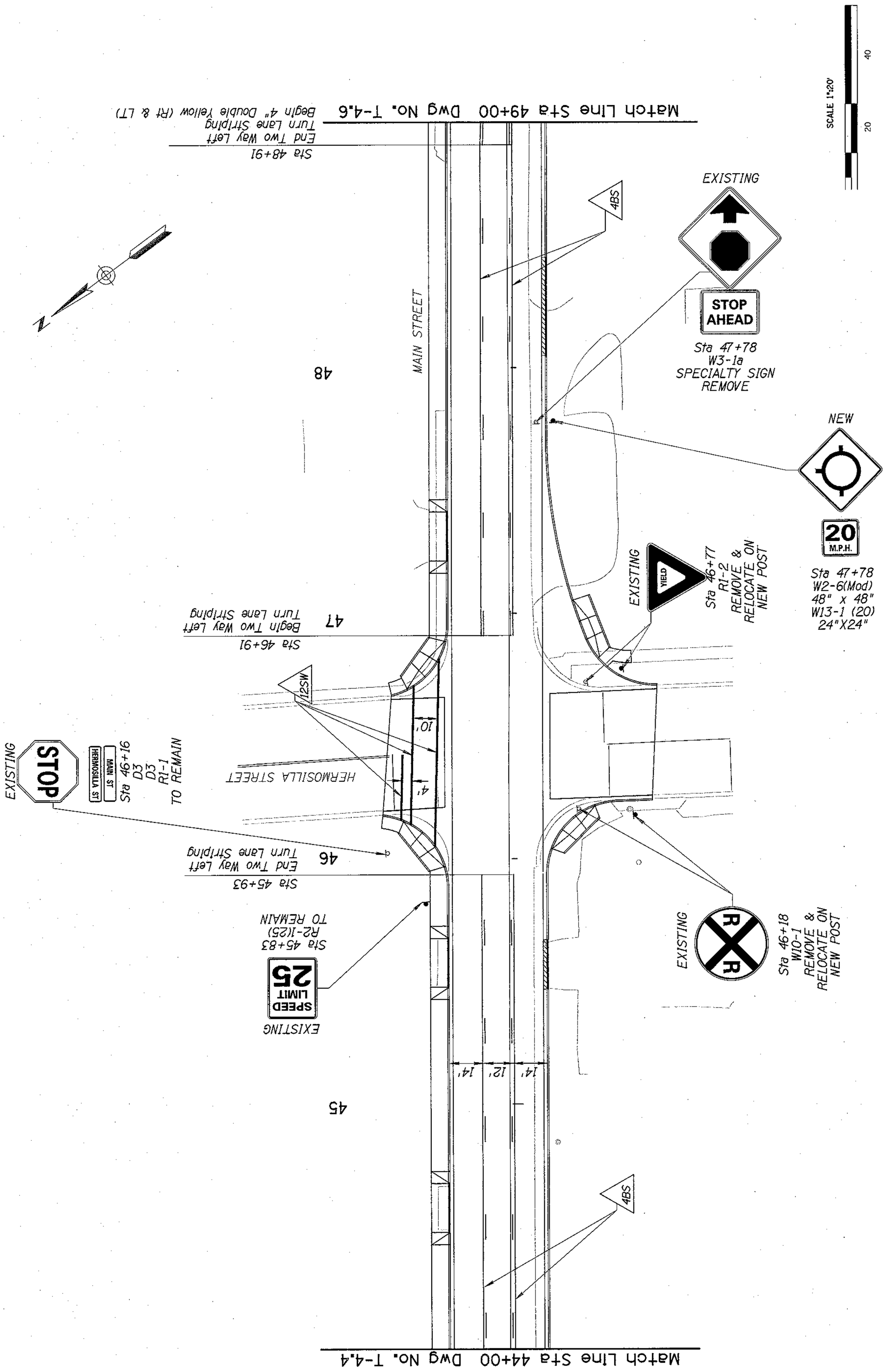

NO.	DESCRIPTION OF REVISION	MADE BY	DATE

Two working days before you dig.
CALL FOR THE BLUE STAKES
1-800-782-5348
Blue Stake Center

	NAME	DATE
DESIGN	PSP, EGM	02/07
DRAWN	WBE	02/07
CHECKED	SCB, WDS	02/07

DMJM HARRIS | AECOM

PROJECT NAME

DOWNTOWN STREETS - PHASE I

City of Casa Grande
510 East Florence Blvd
Casa Grande, Arizona 85222

SIGNING & STRIPING SHEET
MAIN STREET
STA 44+00 TO STA 49+00

REGISTERED PROFESSIONAL ENGINEER (CIVIL)
CERTIFICATE NO. 20959
JOHN P. VAN ECHO
Date Signed 3-7-07

DWG NO. T-4.5

Sheet No. 50 of 93