2012 INTERNATIONAL RESIDENTIAL CODE
2011 NATIONAL ELECTRICAL CODE

1 - COVER PAGE
2 - FOUNDATION
F1 - FOUNDATION DETAIL
3 - LAYOUT PLAN
4 - LAYOUT W/DIMENSIONS
5 - ROOF PLAN
6- SHEAR WALL PLAN
7 - PLUMBING PLAN
8 - ELECTRICAL PLAN
9 - MECHANICAL PLAN
10 - ELEVATIONS
11 - PLOT PLAN
D1 - ROOF FRAMING
D2 - FRAMING
G1 - GENERAL NOTES
G2 - GENERAL NOTES
P1 - PLOT PLAN

RESIDENTIAL REHABILITATION

JOSEFA ENRIQUES

SQUARE FEET	
LIVING	-1137
CARPORT	- 250
PORCH	- 30
UTILITY	- 56

COVER PAGE

NAME JOSEFA ENRIQUES
ADDRESS 1114 N. SHULTZ STREET

DRAWN BY LJW/BAT

DATE 10/12/2015

PAGE 1

NOT TO SCALE

N

2012 INTERNATIONAL RESIDENTIAL CODE
2011 NATIONAL ELECTRICAL CODE

1 - COVER PAGE
2 - FOUNDATION
F1 - FOUNDATION DETAIL
3 - LAYOUT PLAN
4 - LAYOUT W/DIMENSIONS
5 - ROOF PLAN
6- SHEAR WALL PLAN
7 - PLUMBING PLAN
8 - ELECTRICAL PLAN
9 - MECHANICAL PLAN
10 - ELEVATIONS
11 - PLOT PLAN
D1 - ROOF FRAMING
D2 - FRAMING
G1 - GENERAL NOTES
G2 - GENERAL NOTES
P1 - PLOT PLAN

RESIDENTIAL REHABILITATION

JOSEFA ENRIQUES

SQUARE FEET	
LIVING	-1137
CARPORT	- 250
PORCH	- 30
UTILITY	- 56

COVER PAGE

NAME JOSEFA ENRIQUES
ADDRESS 1114 N. SHULTZ STREET

DRAWN BY LJW/BAT

DATE 10/12/2015

PAGE 1

NOT TO SCALE

N

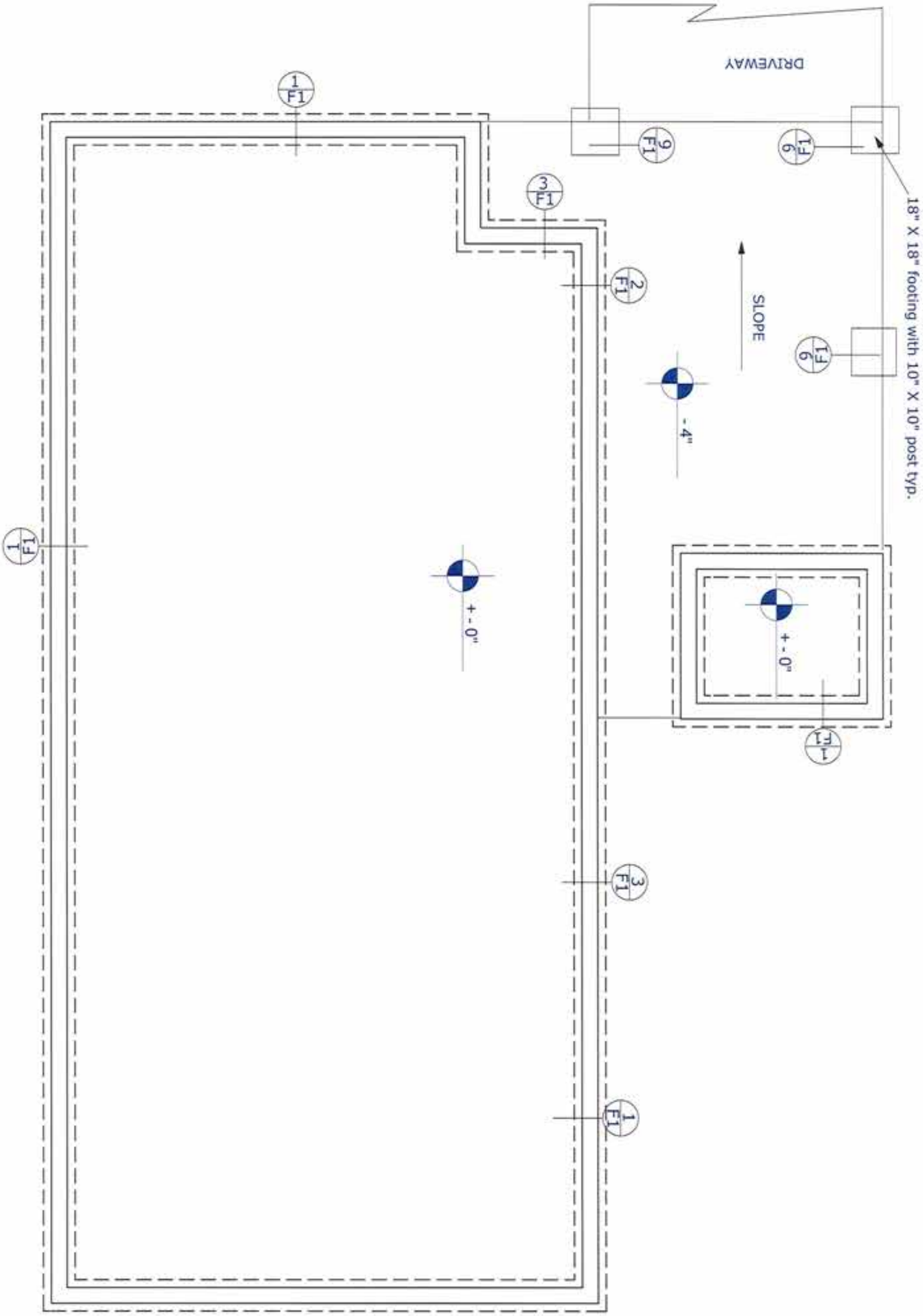

N

NOT TO SCALE

PAGE	DATE	DRAWN BY	NAME JOSEFA ENRIQUES	FOUNDATION
2	11/14/2013	LJW	ADDRESS 1114 N. SHULTZ STREET	

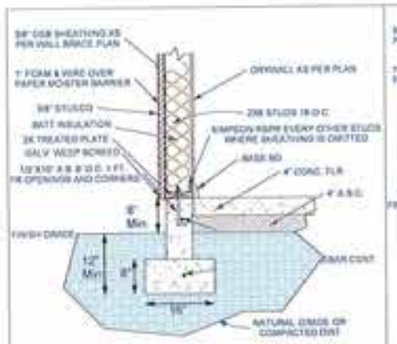

1 TYP. EXT. WALL FOOTING

2 EXT. FOOTING W LANDING

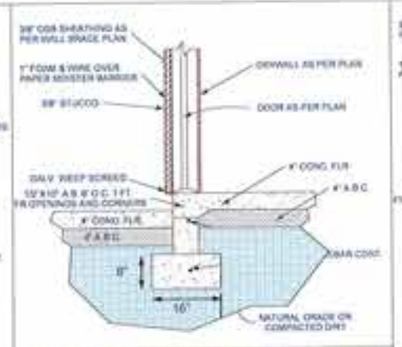

3 EXT. FOOTING @ DOORWAY

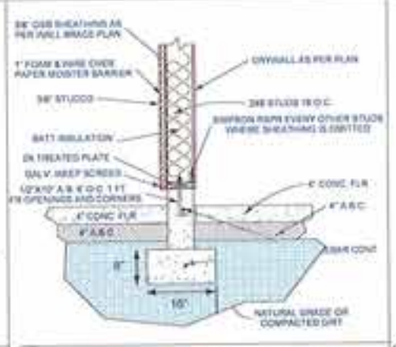

4 FOOTING @ GARAGE WALL

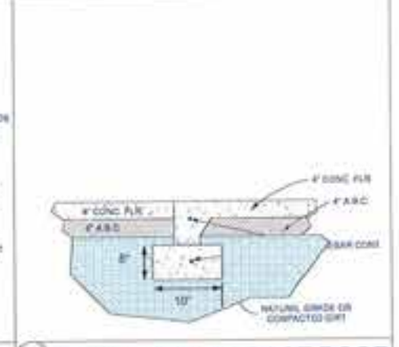

5 FOOTING @ GARAGE DOOR

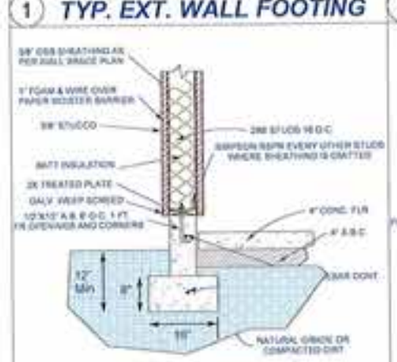

6 FOOTING @ PORCH WALL

7 FOOTING @ GARAGE/HOUSE WALL

8 FOOTING @ GARAGE WALL

9 COLUMN FOOTING DETAIL

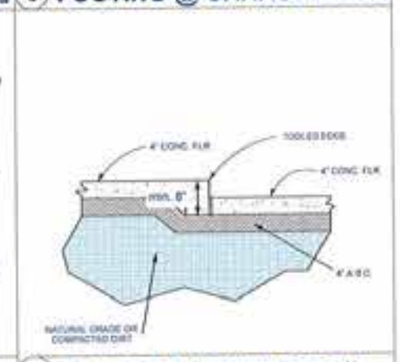

10 GARAGE BUMPER DETAIL

11 PATIO TURN DOWN

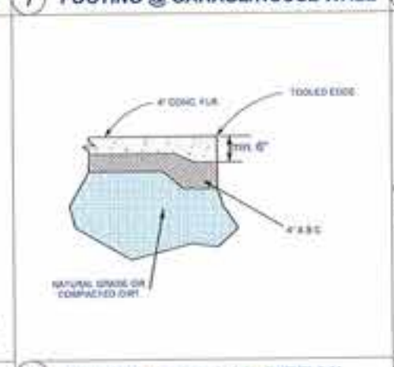

12 DOOR LANDING DETAIL

13 POST FOOTING

ALL DIMINSIONS SHOWN ARE MINIMUNS

FOUNDATION DETAIL

NAME JOSEFA ENRIQUES

ADDRESS 1114 N. SHULTZ STREET

DRAWN BY LJW/BAT

DATE 10/12/2015

PAGE F1

NOT TO SCALE

N

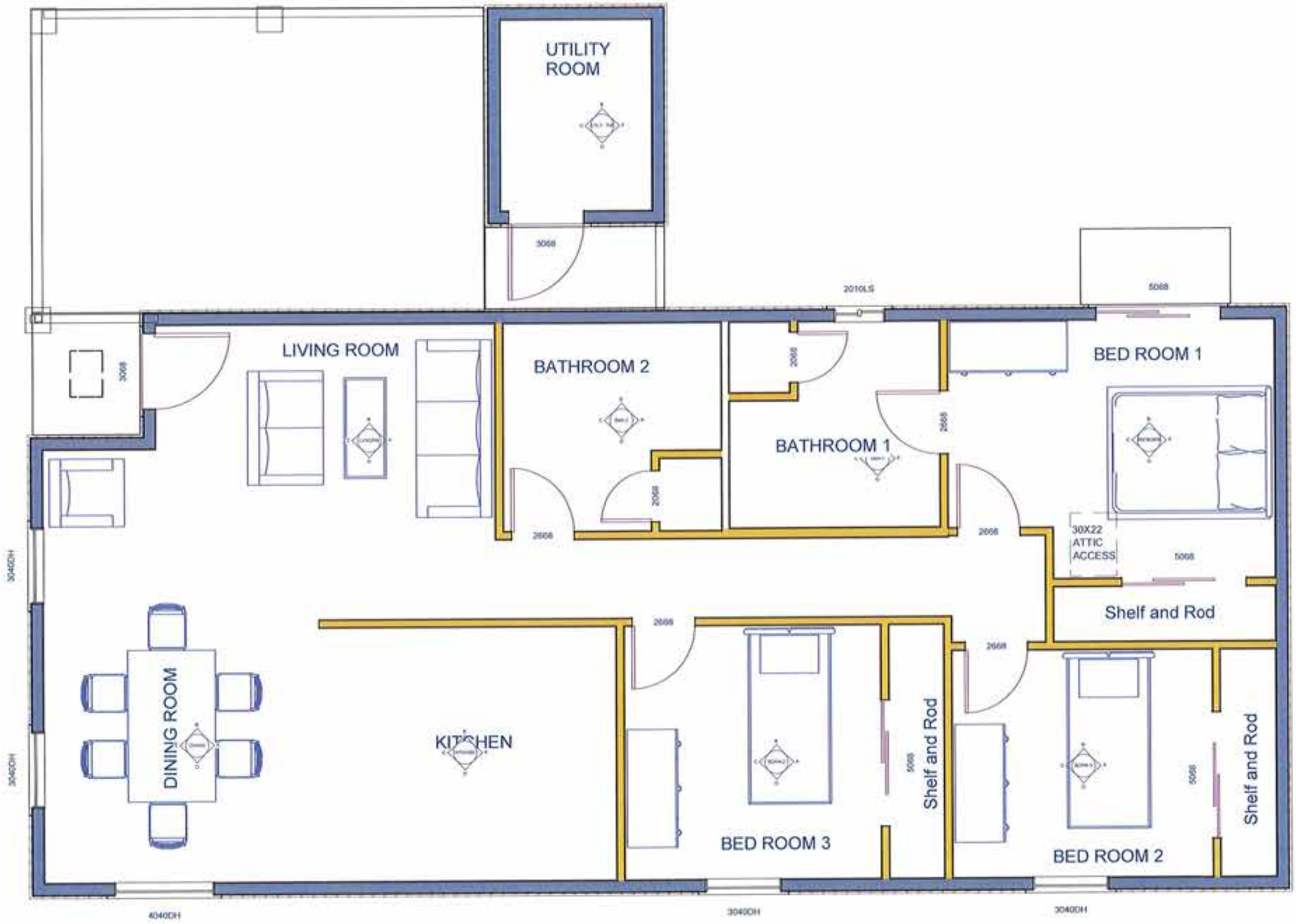

NOT TO SCALE

N

LAYOUT

NAME JOSEFA ENRIQUES
ADDRESS 1114 N. SHULTZ STREET

DRAWN BY LJW/BAT

DATE 10/12/2015

PAGE 3

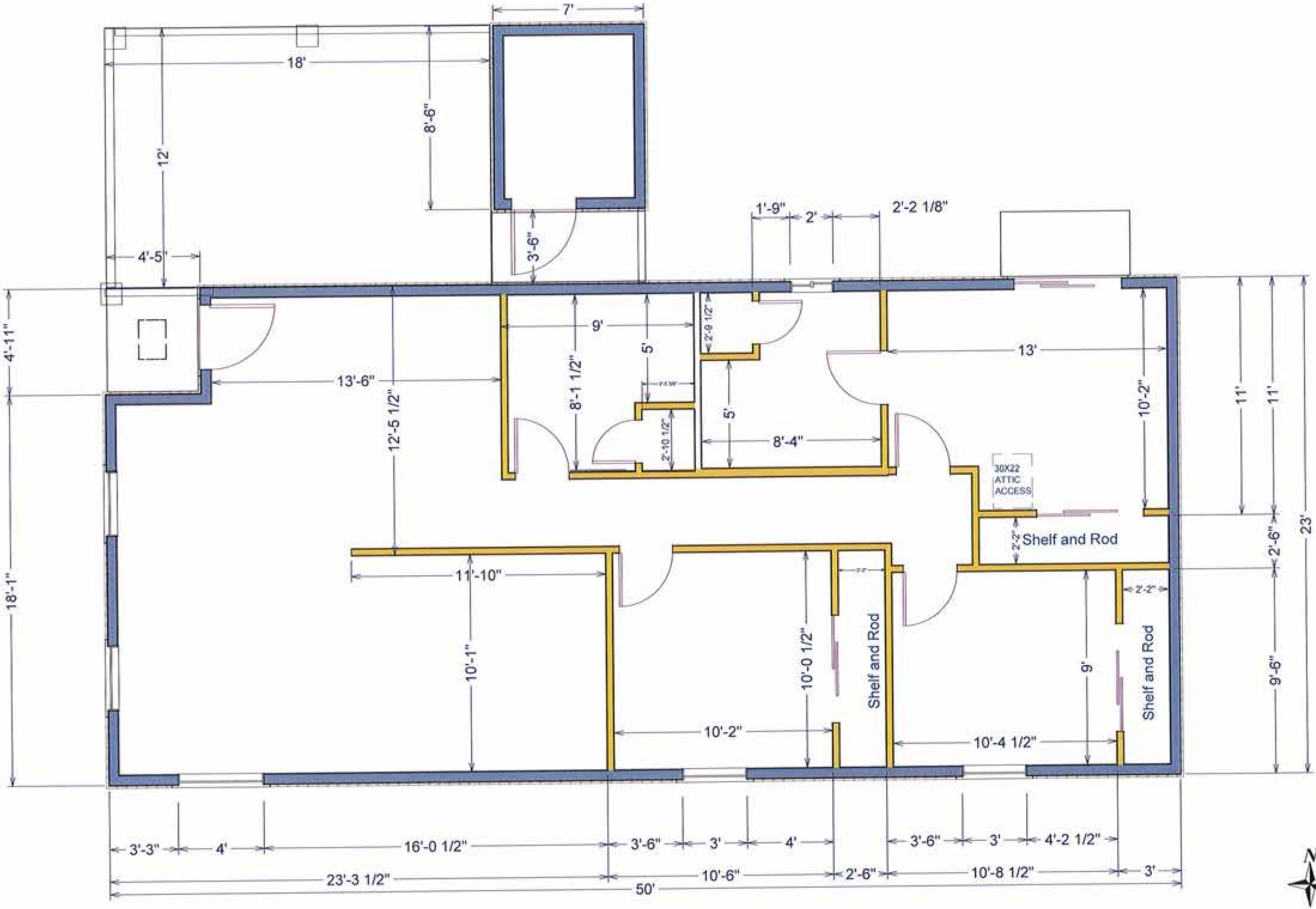

NOT TO SCALE

LAYOUT/ DIMENSIONS

NAME JOSEFA ENRIQUES
ADDRESS 1114 N. SHULTZ STREET

DRAWN BY LJW/BAT

DATE 10/12/2015

PAGE 4

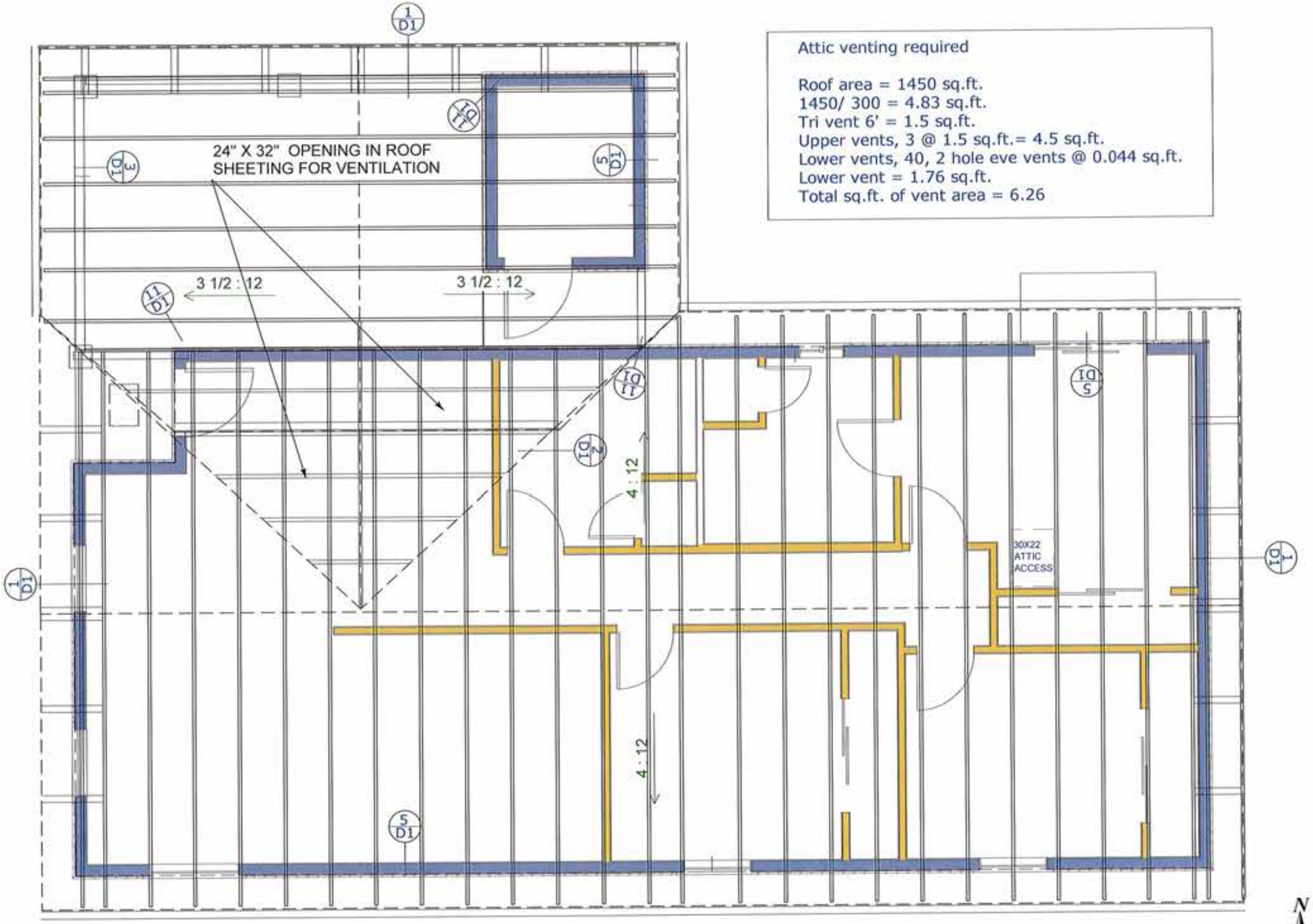

Attic venting required

Roof area = 1450 sq.ft.
1450/ 300 = 4.83 sq.ft.
Tri vent 6' = 1.5 sq.ft.
Upper vents, 3 @ 1.5 sq.ft.= 4.5 sq.ft.
Lower vents, 40, 2 hole eve vents @ 0.044 sq.ft.
Lower vent = 1.76 sq.ft.
Total sq.ft. of vent area = 6.26

NOT TO SCALE

ROOF PLAN

NAME JOSEFA ENRIQUES
ADDRESS 1114 N. SHULTZ STREET

DRAWN BY LJW/BAT

DATE 10/12/2015

PAGE 5

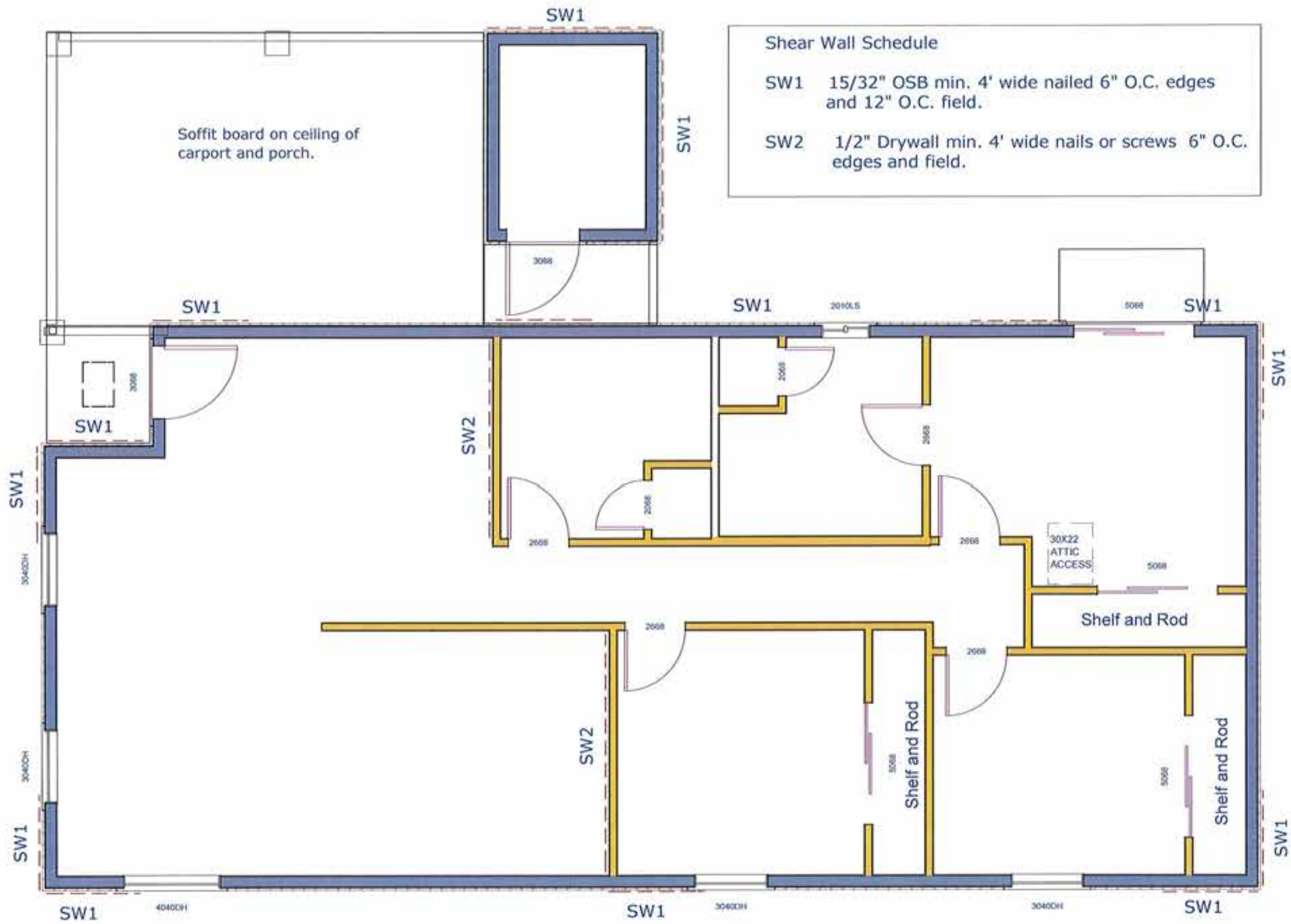

Shear Wall Schedule

SW1 15/32" OSB min. 4' wide nailed 6" O.C. edges and 12" O.C. field.

SW2 1/2" Drywall min. 4' wide nails or screws 6" O.C. edges and field.

SHEAR WALL

NAME JOSEFA ENRIQUES
ADDRESS 1114 N. SHULTZ STREET

DRAWN BY LJW/BAT

DATE 10/12/2015

NOT TO SCALE

N

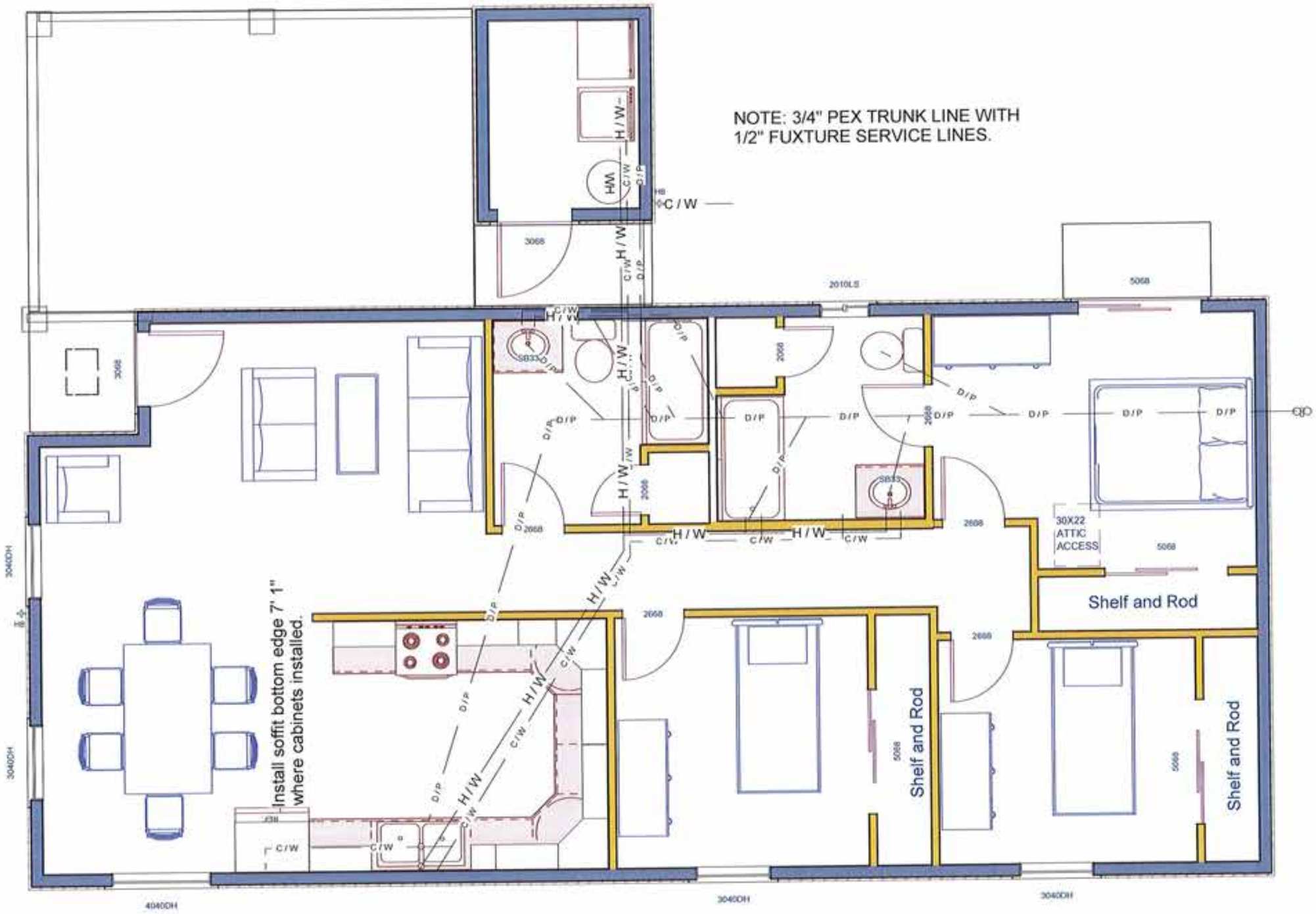

PLUMBING PLAN

NAME JOSEFA ENRIQUES

ADDRESS 1114 N. SHULTZ STREET

DRAWN BY LJW/BAT

DATE 10/12/2015

PAGE 7

NOT TO SCALE

N

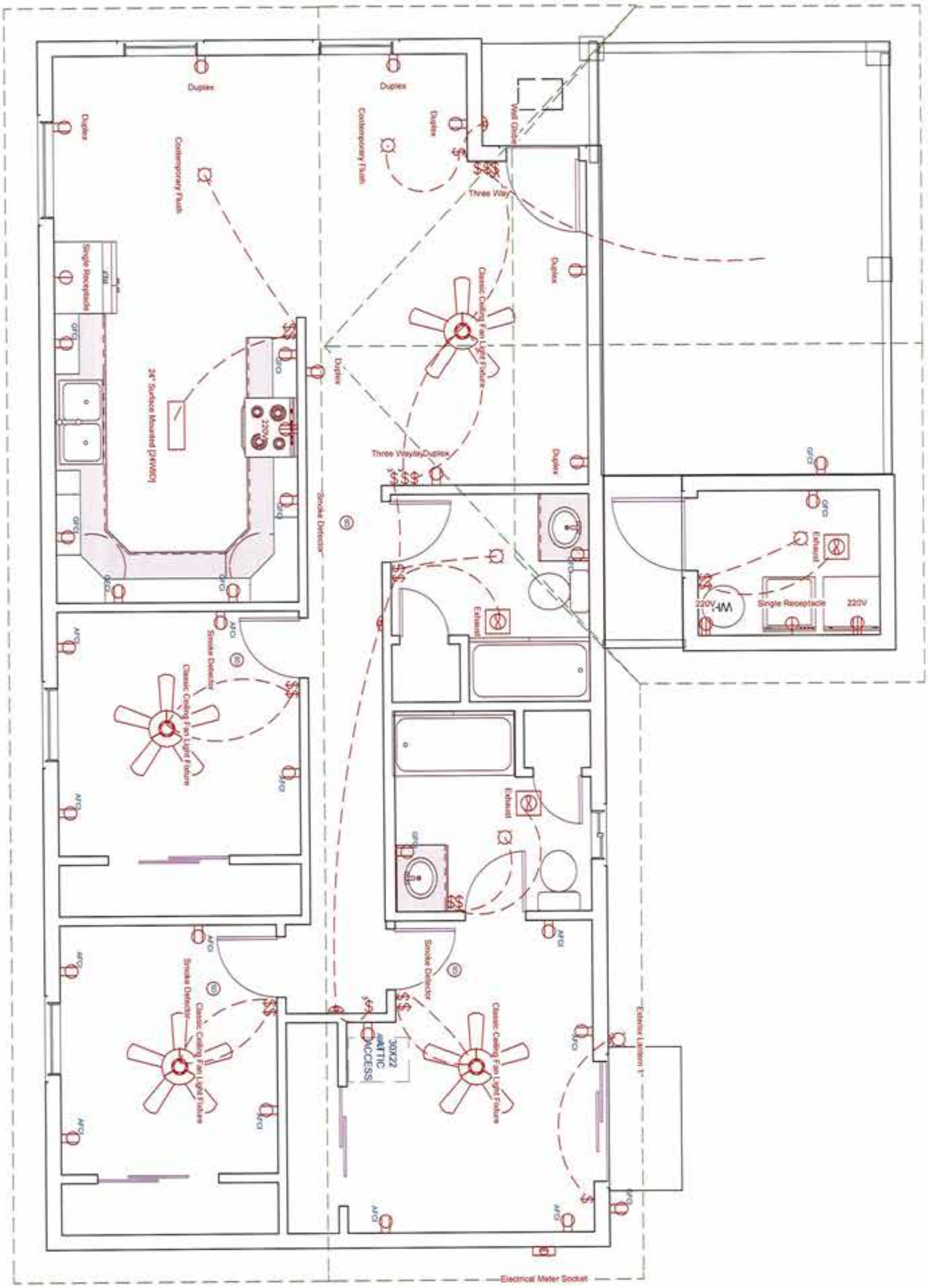

NOT TO SCALE

PAGE	DATE	DRAWN BY	NAME JOSEFA ENRIQUES	ELECTRICAL PLAN
8	10/12/2015	LJW/BAT	ADDRESS 1114 N. SHULTZ STREET	

HVAC CONTRACTOR WILL DETERMINE UNIT SIZE, DUCT SIZE, LOCATION OF REGISTERS. MANUAL J, S AND D WITH REPORTS PROVIDED.

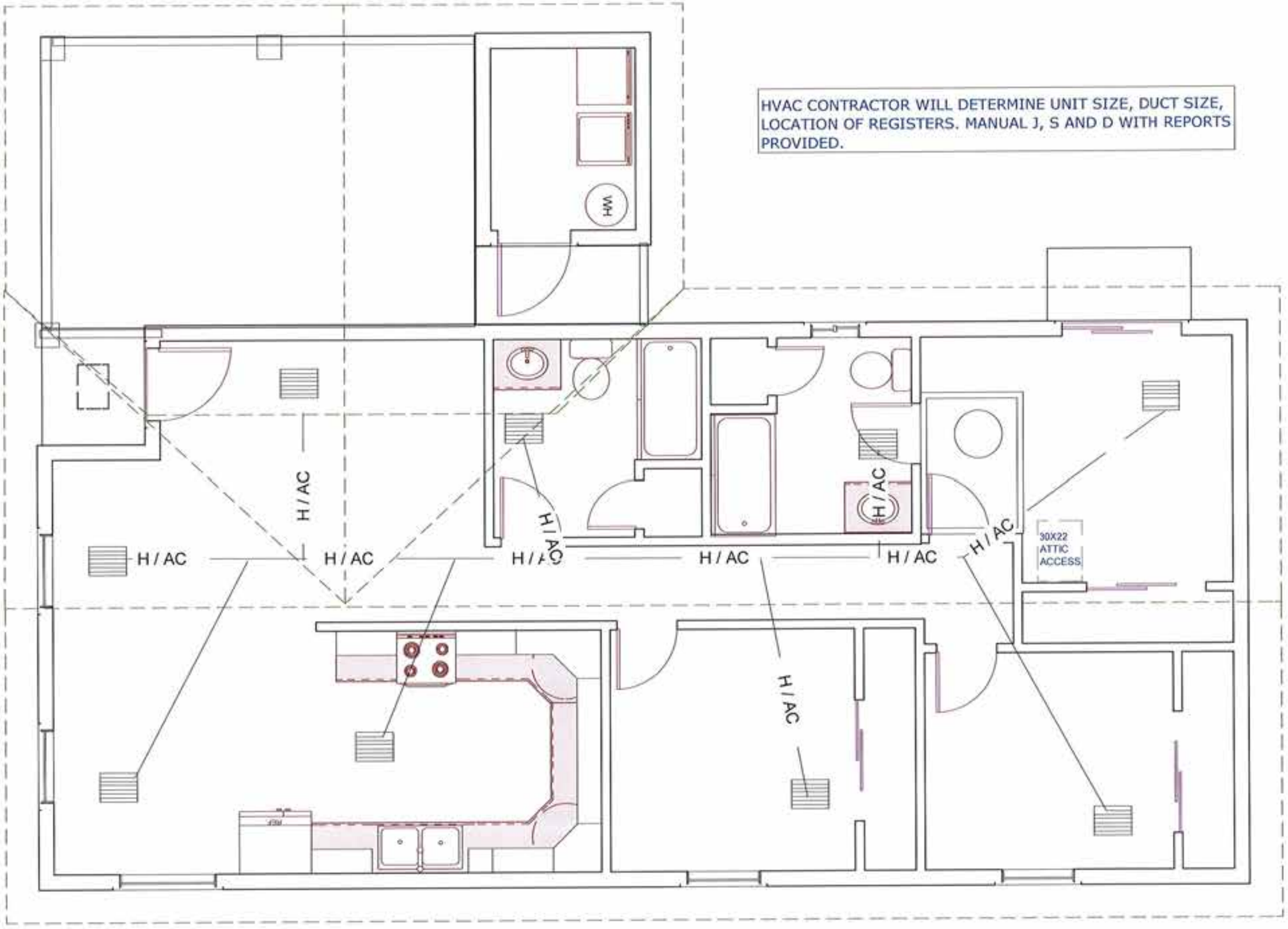

MECHANICAL PLAN

NAME JOSEFA ENRIQUES

ADDRESS 1114 N. SHULTZ STREET

DRAWN BY LJW/BAT

DATE 10/12/2015

PAGE 9

NOT TO SCALE

N

FRONT VIEW

REAR VIEW

NOTE: FF ELEVATION 14" ABOVE TOP OF ADJACENT CURB

Cross Section 26

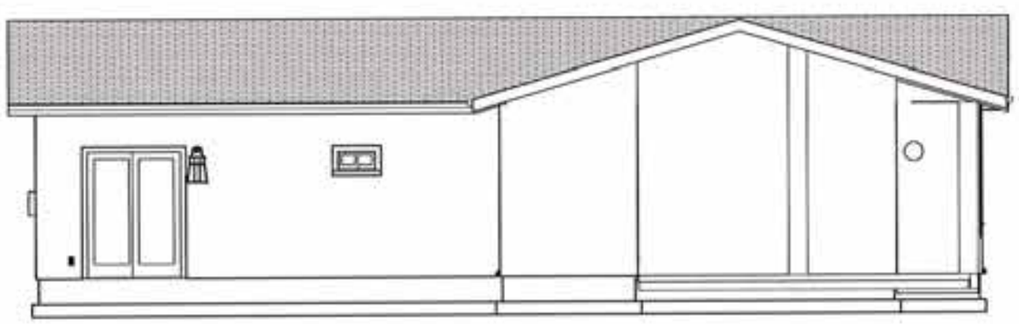

LEFT VIEW

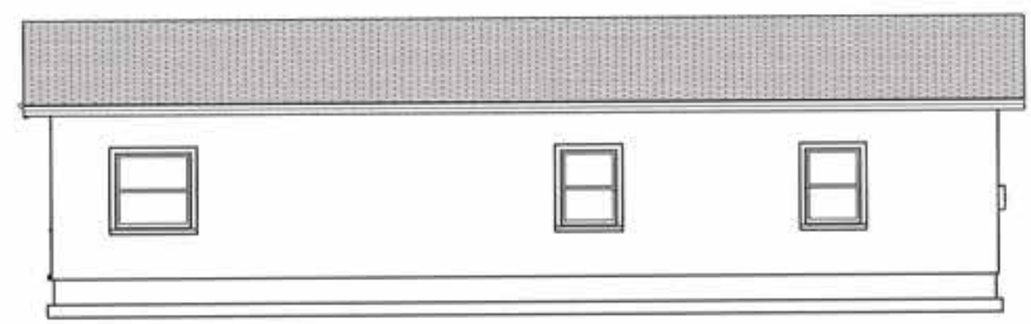

RIGHT VIEW

Cross Section 25

NOT TO SCALE

N

ELEVATIONS

NAME JOSEFA ENRIQUES
ADDRESS 1114 N. SHULTZ STREET

DRAWN BY LJW/BAT

DATE 10/12/2015

PAGE 10

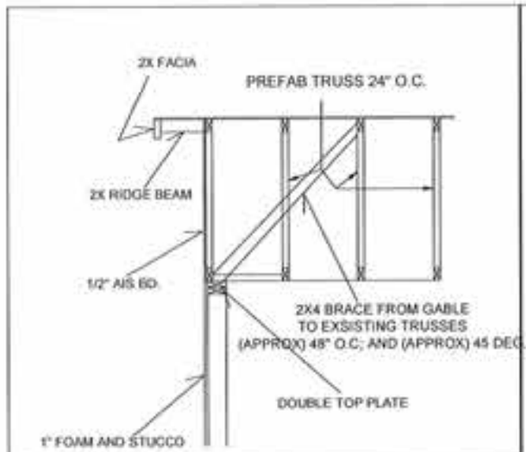

1 GABLE END BRACING

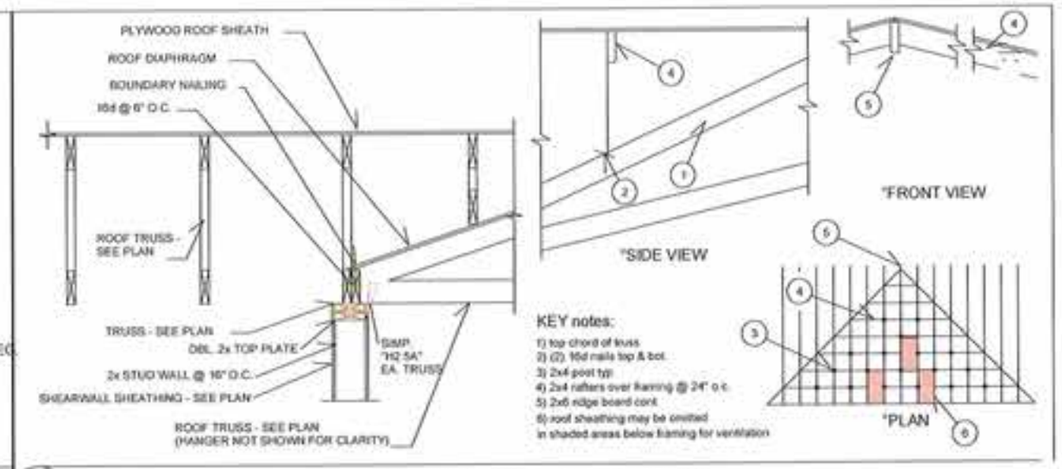

2 INTERSECTING TRUSSES/VALLEY

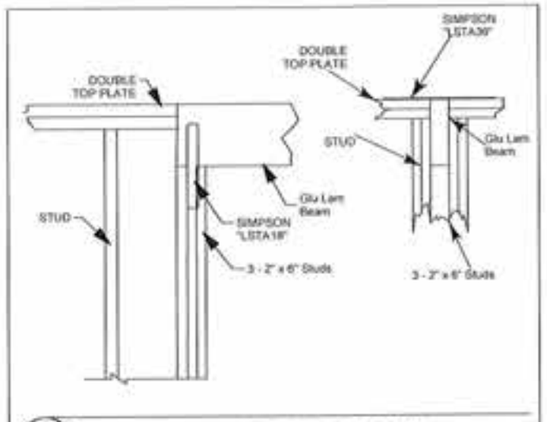

11 BEARING BEAM AT WALL SCALE

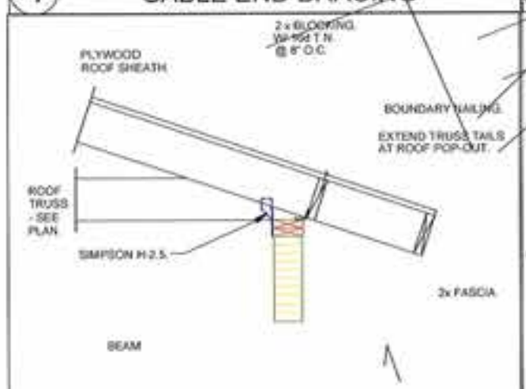

3 ROOF TRUSS TO BEAM

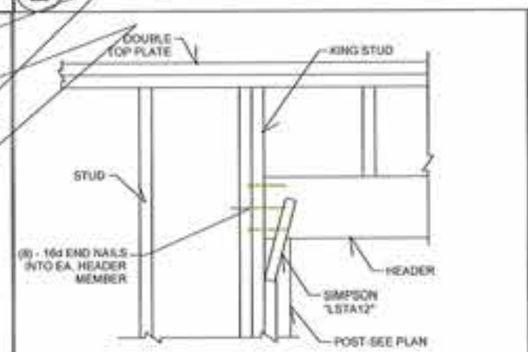

4 GARAGE DOOR BEAM BEARING SCALE

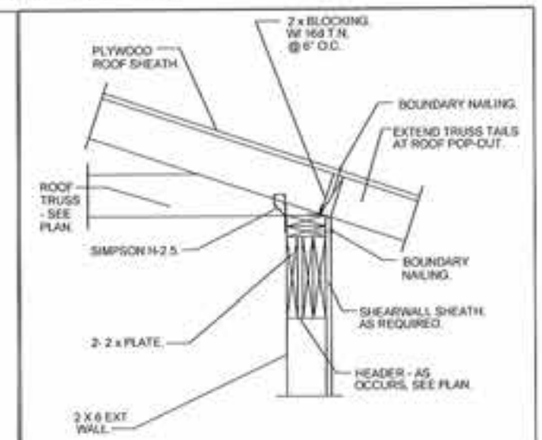

5 ROOF TRUSS TO WALL SCALE

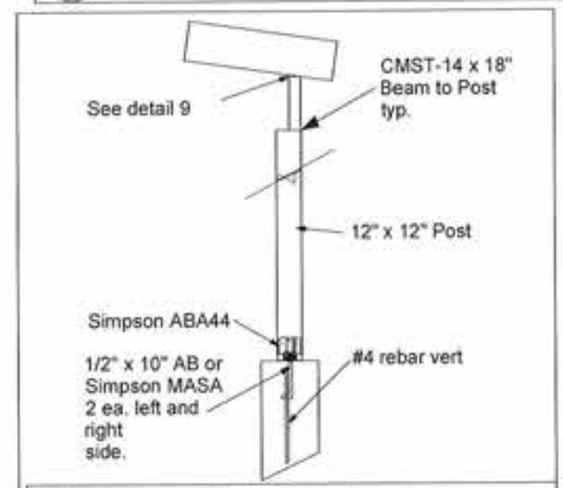

10 Post Detail

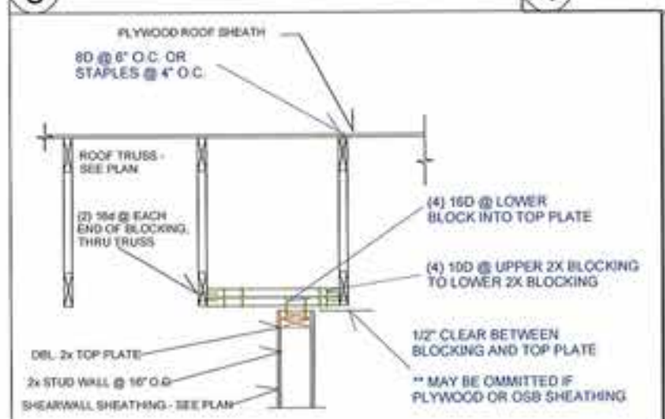

6 SHEAR TRANSFER CONNECTION PARALLEL TO ROOF FRAMING

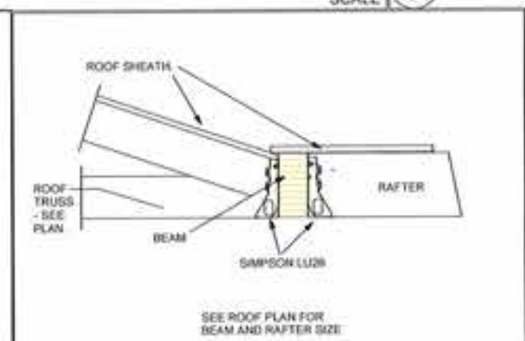

7 ROOF TRUSS TO BEAM

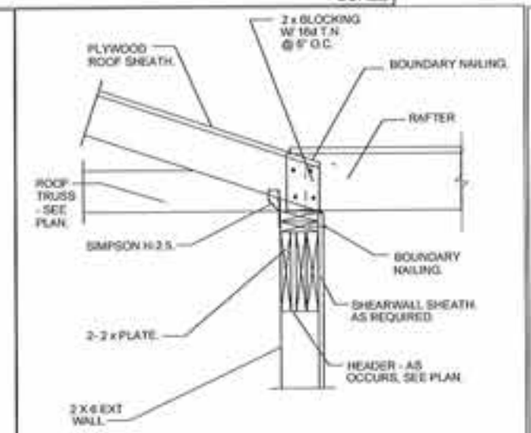

8 TRUSS TO WALL @ PATIO SCALE

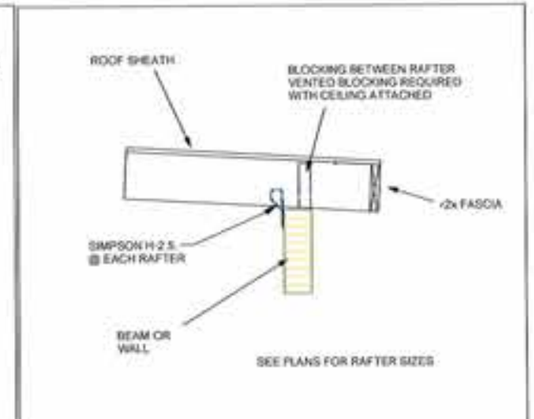

9 RAFTER TO WALL / BEAM

N

NOT TO SCALE

ROOF FRAMING

NAME JOSEFA ENRIQUES
ADDRESS 1114 N. SHULTZ STREET

DRAWN BY LJW/BAT

DATE 10/12/2015

PAGE D1

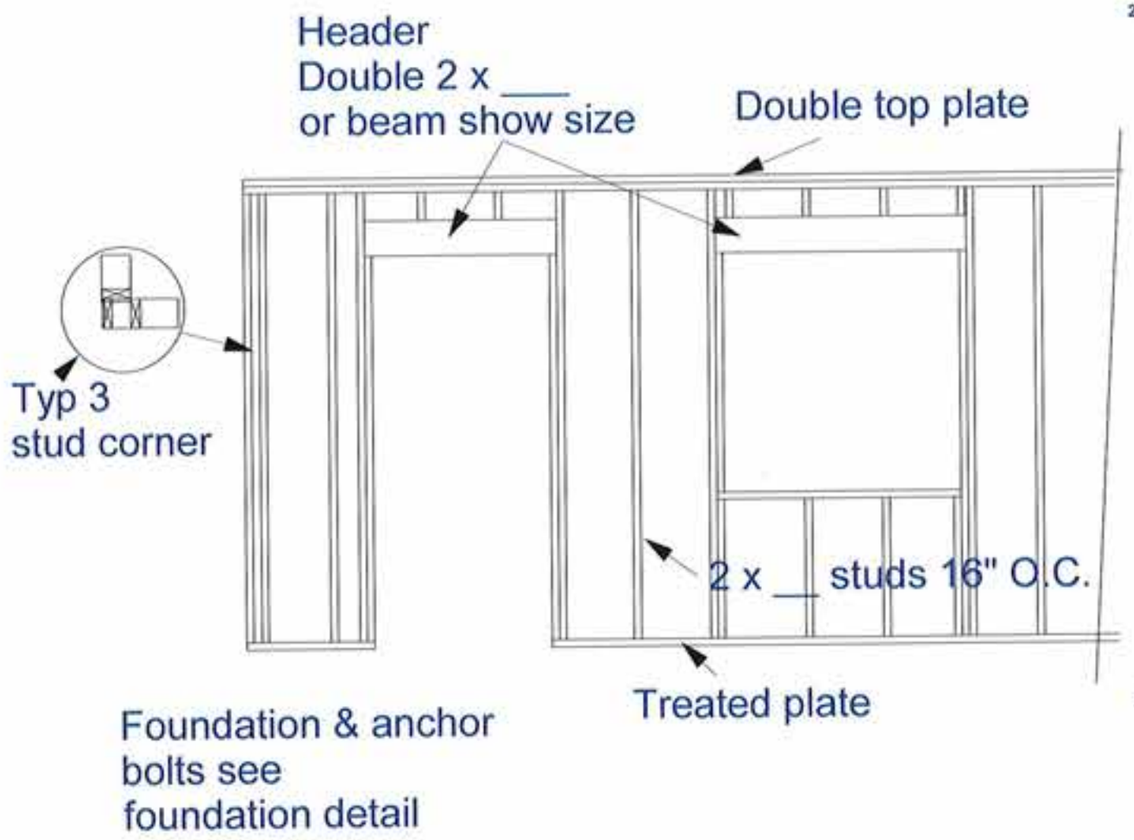

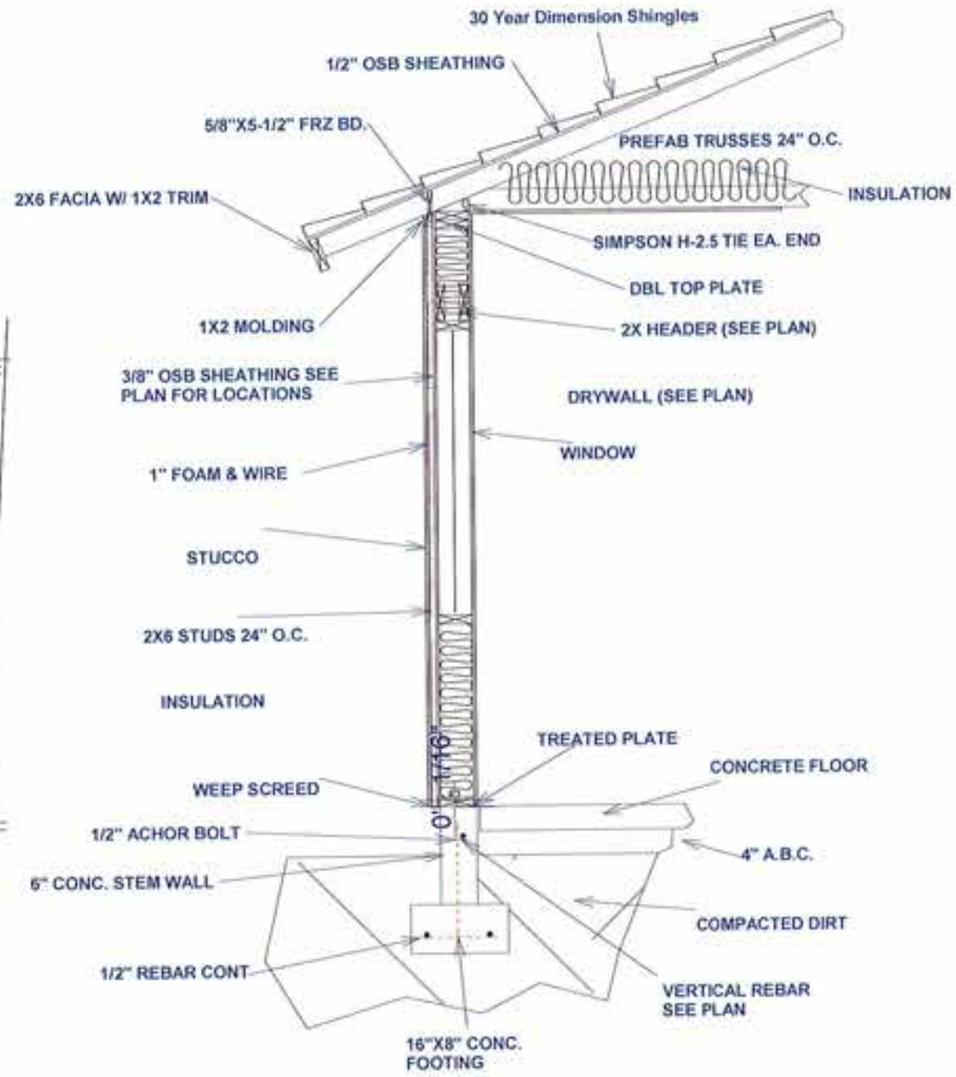

WALL SECTION

FRAMING

NAME JOSEFA ENRIQUES
ADDRESS 1114 N. SHULTZ STREET

DRAWN BY LJW/BAT

DATE 10/12/2015

PAGE D2

NOT TO SCALE

N

CODES:
2012 International Residential Code

FOUNDATION:
1. FOUNDATIONS DESIGN IS BASED ON MINIMUN SOIL BEARING VALUES AS PER 2012 IBC BUILDING CODE.
2. BEAR ALL FOOTINGS ON FIRM NATIVE SOIL OR AN ENGINEERED PAD.
3. PLACE CONCRETE ONLY ON CLEAN AND FIRM INSPECTED BEARING MATERIALS.
4. ALLOWABLE SOIL BEARING PRESSURE:
   A. 1000 PSF @ min. 12" BELOW NATRAL GRADE(FOR DEAD LOADS).
   B. 1500 PSF @ min. 12" BELOW NATURAL GRADE (FOR D.L. AND L.L.).
   C. ALLOW 1/3 INCREASE IN ALLOWABLE STRESSES FOR TOE PRESSURES ON ECCENTRICALLY LOADED FOUNDATIONS OR FOUNDATIONS SUBJECT TO OVERTURING LOADS.
5. BOTTOMS OF ALL FOOTING SHALL BEAR ON UNDISTURBED SOIL 18" BELOW NATURAL GRADE EXTERIOR AND 12" INTERIOR. DESIGN SOIL PRESSURE 1000 PSF DEAD LOAD OR 1500 PSF TOTAL LOAD.

TERMITE CONTROL:
1. ALL SOIL UNDER FOOTINGS AND SLABS ON GRADE SHALL BE TREATED WITH TERMITE POISON BEFOR POURING CONCRETE.

CONCRETE:
1. CONCRETE QUALITY TO CONFORM TO ACI-301 AND ACI-318.
2. USE REGULAR WEIGHT CONCRETE WITH TYPE 1 OR 2 CEMENT PER ASTM c150 AGGREGATE/ ASTM c33 AND POTABLE WATER.
3. MINIMUM 28 DAY COMPRESSIVE STRENGTH 2500 PSI.
4. MAXIMUM SLUMP 5".
5. DO NOT USE ADMIXTURES WITHOUT APPROVAL. ADMIXTURES CONTAINING CHLORIDES SHALL NOT BE USED.
6. CONCRETE SHALL NOT BE IN CONTACT WITH ALUMINUM.
7. ALL EXPOSED EDGES AND CORNERS SHALL BE CHAMFERED, BEVLED, OR ROUNDED.
8. WAIT 48 HOURS BETWEEN ADJACENT CONCRETE CASTINGS.
9. NON SHRINK CEMENT GROUT SHALL BE NON METALLIC HIGH STRENGTH OF 4000 PSI.

REINFORCING:
1. DEFORMED BARS SHALL CONFORM TO ASTM-615 GRADE 60.
2. CONCRETE COVERAGE FOR REINFORCING BARS SHALL BE AS FOLLOWS"
   A. UNIFORMED CONCRETE IN CONTACT WITH EARTH 3"
   B. FORMED CONCRETE IN CONTACT WITH EARTH 2".
3. LAP SPLICE LENGTHS SHALL BE 40 BAR DIAMETERS MINIMUM UON
4. DOWEL ALL VERTICALS REINFORCED TO FOUNDATIONS.
5. SECURLY TIE AND SUPPORT ALL REINFORCING STEEL IN PLACE BEFORE PLACING CONCRETE OR GROUT.
6. REINFORCED PLACEMENT BAR BENDS AND STANDARD HOOKS SHALL COMPLY WITH ACI-317 AND CRSI STANDARDS.

MASONRY:
1. USE HOLLOW CONCRETE BLOCK UNITS: GRADE N NORMAL WEIGHT, f'm=1350 PSI.
2. LAY UNITS IN RUNNING BOND. CORNERS SHALL HAVE A STANDARD BOND BY OVERLAPPING UNITS.
3. MORTAR: TYPE S, MINIMUM 28 DAY COMPRESSIVE STRENGTS 1800 PSI
4. GROUT: TYPE S, MINIMUM 28 DAYS COMPRESSIVE STRENGTH 2000 PSI
5. MAXIMUM GROUT LIFTS WITHOUT CLEAN-OUTS AND INSPECTION 4'

STRUCTURAL STEEL:
1. LATEST AMERICAN INSTITUTE OF STEEL CONSTRUCTION AISC HANDBOOKS SHALL APPLY.
2. ROLLED SECTIONS AND PLATES SHALL CONFORM TO ASTN A-36 fy=36ksi
3. BOLTS AND PLAIN ANCHORS SHALL CONFORM TO ASTM A-307.
4. EXPANSION BOLT SHALL BE APPROVED DRILLED ANCHORS TORQUE AND INSTALL AS PER MANUFACTURE SPECS.

MECHANICAL:
1. EQUIPMENT SHALL BE CAPABLE OF MAINTAINING A ROOM TEMPERATURE OF 70 DEGREE F. AT A POINT 3' ABOVE TH FLOOR.

SUPPLEMENTARY NOTES:
1. VERIFY ALL DIMENSIONS AND CONDITIONS PRIOR TO STARTING WORK.
2. VERIFY IN THE FIELD ALL EXSISTING CONDITIONS SHOWN ON THE DRAWINGS. NOTIFY THE DESIGNER OF ANY DISCREPANCIES OR INCONSISTENCIES.
3. ESTAABLISH AND VERIFY ALL OPENINGS AND INSERTS FOR MECHANICAL, ELECTRICAL, AND PLUMBING WITH APPROPRIATE TRADES AND DRAWINGS.
4. PROVIDE ALL NECESSARY TEMPORARY SHORING, GUYING, OR OTHER MEANS TO AVOID EXCESSIVE STRESSES AND TO HOLD STRUCTURAL ELEMENTS IN PLACE DURING CONSTRUCTION.
5. OPTIONS ARE FOR THE CONTRACTORS CONVENIENCE. HE SHALL BE RESPONSIBLE FOR ALL CHANGES NECESSARY IF HE CHOOSES AN OPTION AND SHALL COORDINATE ALL DETAILS.
6. ANY ENGGINEERING DESIGN PROVIDED AND SUBMITTED FOR REVIEW SHALL BEAR THE SEAL AND SIGNATURE AND REGISTER IN ARIZONA.
7. DESIGNER SHALL NOT BE HELD RESPONSIBLE FOR ANY AND ALL COST EXPENSES DAMAGES OR OTHER LIABILITY OF ANY NATURE ARISING OUT OF IN CONNECTION WITH OR IN ANY WAY RELATED TO THE PLANS DRAWN BY DESIGNER.

1. ALL TRUSSES TO BE MANUFACTURED BY APPROVED TRUSS BUILDER AND INSPECTED BY A SECONDARY TESTING AGENCY.
2. ALL TRUSSES ARE TO BE ENGINEERED AND STAMP WITH APPROVED SEAL. AND SUBMITTED TO BUILDING DIVISION PRIOR TO FRAMING INSPECTION.
3. PROVIDE ALL BRACING AS REQUIRED BY TRUSS ENGINEERING FIRM.
4. ALL HEADER ARE TO BE 2-2X6 UNLESS OTHERWISE NOTED BY BEAM SIZE.
5. ALL CONVENTIONAL FRAMING IS TO BE HEM FIR #2 OR BETTER.
6. ALL SHEATHING IS TO BE 1/2" O.S.B. EXCEPT ON ALL EXPOSED AREAS WHERE 1/2" CCX IS REQUIRED
7. ALL NAILING AS PER 2012 IRC SPECS
8. SUMMIT TRUSS LAYOUT AND ENGINEERING TO BUILDING DEPT. PRIOR TO FRAMING INSPECTIONS

GENERAL NOTES

NAME JOSEFA ENRIQUES
ADDRESS 1114 N. SHULTZ STREET

DRAWN BY LJW/BAT

DATE 10/12/2015

NOT TO SCALE

N

PAGE G1

GENERAL ELECTRICAL NOTES

CODES USED: 2012 IRC AND 2011 NEC

1. IT IS THE RESPONSIBILITY OF THE ELECTRICAL CONTRACTOR TO VERIFY ALL EQUIPMENT AND APPLIANCE AMPERAGE AND MANUFACTURERS SPECIFICATIONS FOR WIRING BEFORE INSTALLATION.

2. THE ELECTRICAL CONTRACTOR IS TO VERIFY ALL OUTLET AND EQUIPMENT LOCATIONS WITH OWNER BEFORE INSTALLATION.

3. ALL ELECTRICAL WIRING TO BE COPPER UNLESS OTHERWISE NOTED.

4. ALL ELECTRICAL EQUIPMENT SHALL BE:
(A) LISTED AND LABELED BY AN INDEPENDENT TESTING LABORATORY.
(B) USED AND INSTALLED IN ACCORDANCE WITH LISTING INSTRUCTIONS.

5. ALL OUTLETS IN THE GARAGE/CARPORT, KITCHEN, AND BATHROOM COUNTERTOPS, AS WELL AS OUTSIDE SHALL BE GFCI PROTECTED. OUTSIDE OUTLETS SHALL ALSO HAVE WATERPROOF COVERS.

6. KITCHEN COUNTER RECEPTICALS SHALL BE SERVED BY AT LEAST 2 SEPARATE 20 AMP CIRCUITS. LAUNDRY ROOM AND BATHROOM RECEPTACLES TO BE A SEPARATE 20 AMP CIRCUIT WITH NO OTHER OUTLETS ON THAT CIRCUIT.

7. DRYER AND RANGE TO HAVE (4) WIRE RECEPTACLES.

8. FIXTURES (CEILING FANS INCLUDED) THAT ARE LOCATED IN DAMP OR WET LOCATIONS SHALL BE "LISTED" TO BE SUITABLE FOR SUCH LOCATIONS.

9. ONLY APPROVED CEILING FAN BOXES SHALL BE USED.

10. SMOKE & CO DETECTORS SHALL BE INSTALLED AS FOLLOWS:
(A) WALL INSTALLATIONS MIN. 6"/ MAX. 12" BELOW CEILING AND MIN. 18" FROM ANY CORNER.
(B) CEILING INSTALLATION MIN. 6" FROM ANY VERTICAL SURFACE.
(C) INSTALLATION WILL BE A MIN. 3' FROM ANY MECHANICAL SUPPLY OR RETURN AIR GRILL.
(D) PER MANUFACTURER'S SPECIFICATIONS.
(E) SMOKE DETECTORS SHALL BE HARD WIRED WITH BATTERY BACKUP.

11. ALL OUTLETS INSTALLED IN DWELLING UNIT BEDROOMS SHALL BE PROTECTED BY ARC FAULT CIRCUIT INTERRUPTER FOR BOTH LIGHTING AND OUTLET CIRCUITS.

12. LOW VOLTAGE (TELEPHONE AND COAX CABLE PREWIRE) MUST BE VERIFIED WITH HOMEOWNER.

13. HEIGHT OF ALL SWITCH BOXES TO BE 48" ABOVE ROUGH FLOOR TO THE CENTER OF THE SWITCH BOX.

14. HEIGHT OF ALL OUTLET BOXES AND LOW VOLTAGE BOXES TO BE 16" ABOVE ROUGH FLOOR TO THE CENTER OF THE BOX.

WOOD:

1. GENERAL:
   A. COMPLY WITH AMERICAN INSTITUTE OF TIMBER CONSTRUCTION STANDARDS, LATEST EDITION.
   B. EACH PIECE OF LUMBER SHALL BEAR THE GRADE STAMP OF A GRADING RULES APPROVED ANGENCY.
   C. EACH PIECE OF LUMBER IN PLACE SHALL BE OF GRADE SPECIFIED OR BETTER.
D. DO NOT NOTCHOR DRILL JOIST, BEAMS RO LOAD BEARING STUDS WITH OUT APPROVAL.
E. DOUBLE FLOOR JOIST UNDER PARALLEL PARTITIONS.
F. PROVIDE METAL OR 1X3 WOOD CROSS BRACING AT MID SPAN WHEN JOIST EXCEED DEPTH OF 10"
G. PROVIDE 2X BLOCKING AT JOIST BEARING SUPPORTS.
H. PROVIDE FIRESTOPS AS FOLLOWS.
   1. IN CONCEALED SPACES IN WALLS A FURRED SPACES AND SOFFITS AT FLOOR AND CEILING LEVELS.
   2. IN OPENINGS AROUD VENTS, CHIMINEYS, AND FIREPLACES AT FLOOR AND CEILING LEVELS.
   3. IN CONCEALED SPACES BETWEEN WALL STUDS AT STAIRS IN LINE WITH STRINGERS.
I. USE PRESSURE TREATED WOOD AT ALL SILL PLATES.
J. ATTIC ACCESS SHALL BE MIM 22"X30" WITH MIM DEPTH OF HEAD ROOM AT 30" FROM ACCESS.
K. WINDOWS SHALLBE OPENABLE WITH OUT SPECIAL TOOLS. KNOWLEDGE, EFFORT OR KEY.

CONNECTIONS:
A. SEE TABLE R602.3(1) FOR NAILING NOT SPECIFICALLY CALLED OUT ON THE DRAWINGS
B. MAKE FRAMED CONNECTIONS WITH APPROVED FRAMING ANCHORS ON EACH SIDE OF JOIST HANGERS BY SIMPSON OR EQUAL.
C. NAIL PLYWOOD WITH 8D COMMOM NAILS AT 6" SPACING AT EDGES AND BOUNDARIES AND 12" SPACING IN FEILD.
D. PROVIDE STANDARD WASHERS AT BOLTS IN WOOD WITHOUT STEEL PLATES.
E. FOUNDATION PLATES OR SILLS SHALL BE BOLTED TO FOUNDATION WITH ANCHOR BOLTS NOT LESS THE 1/2" DIAMETER, EMBEDDED AT LEAST 7" INTO CONCRETE OR REINFORCED MASONARY UNIT.
F. CENTERS OF ALL ANCHOR BOLTS SHALL BE WITH IN 1/2" OF THE CENTER LINE OF 2X4 WOOD PLATES OR SILLS, AND 1" OF THE CENTER OF 2X6 OR LARGER PLATES OR SILLS . IF ANY OF THE BOLTS ARE CLOSER TO THE EDGE THEN SPECIFIED AN EXP BOLTS MAY BE USED WITH IN 12" OF SAID BOLT.
G. ANCHOR BOLTS FOR FOUNDATION PLATES OF SILLS SHALL E SPACED NO MORE THAN 6' APART
H. ATTACH ALL BRICK VENEER TO WOOD FRAMING WITH VENEER TIES. SIMPSON BT-R/BTS RO EQUAL AT 16" O.C. EACH WAY.

25. 2" planks	16d common	at each bearing
26. collar tie to rafter	3-10d common 4-3"x0.131" nail 4-3" 14 gage staple	face nail
27. jack rafter to hip	3-10d common 4-3"x0.131" nail 4-3" 14 gage staple 2-16d common 3-3"x0.131" nail 3-3" 14 gage staple	toe nail face nail
28. roof rafter to 2x ridge beam	2-16d common 3-3"x0.131" nail 3-3" 14 gage staple 2-16d common 3-3"x0.131" nail 3-3" 14 gage staple	face nail toe nail
29. joist to band joist	3-16d common 5-3"x0.131" nail 5-3" 14 gage staple	face nail
30. ledger strip	3-16d common 3-3"x0.131" nail 3-3" 14 gage staple	face nail
31. wood structural panels and partical board: (b) subfloor, roof and wall sheathing to framing	1/2" and less 19/32" to 3/4" 7/8" to 1" 1-1/8" to 1-1/4"	6d (c) 2-3/8"x0.131" nail (n) 1-3/4" 16 gage (o) 8d (d) or 6d (e) 2-3/8"x0.131" nail (p) 2" 16 gage (q) 8d (c) 10d (d) or 8d (e)
single floor (combination subfloor-underlayment to framing)	3/4"and less 7/8" to 1" 1-1/8" to 1-1/4"	6d (e) 8d (e) 10d (d) or 8d (e)
32. panel siding to framing	1/2" or less 5/8"	6d (f) 8d (f)
33. fiberboard sheathing (g)	1/2" 25/32"	no. 11 gage roofing nail (h) 8d common nail no. 16 gage staple (i) no. 11 gage roofing nail (h) 8d common nail no. 16 gage staple (i)
34. interior paneling	1/4" 3/8"	6d (j) 8d (k)

FLASHING:
METAL FLASHING SHALL BE 26 GA.

PLUMBING:
1. THE T&P RELIEF VALVE DRAIN LINE SHALL BE FULL DRAWN STEEL PIPE OR HARD DRAWN COPPER TUBING EXTENDING TO THE EXTERIOR OF THE BUILDING AND TERMINATED IN A DOWNWARD POSITION NOT MORE THE 2' OR LESS THEN 6" ABOVE GRADE.
2. ABS OR PVC USED IN DRAIN, WASTE AND VENT SYSTEM SHALL BE SCHEDULE 40.
3. COPPER TUBING USED IN WATER PIPING SHALL BE TYPE M MIN WEIGHT IN THE BUILDING ABOVE SLAB.
4. COPPER TUBING USED IN WATER PIPING BELOW SLABS SHALL BE TYPE L MIN WEIGHT INSALLED WITHOUT JOINTS.
5. GAS FUEL PIPING SHALL E WROUGHT IRON OR STEEL GALVANIZED OR BLACK.
6. PLUMBING FIXTURES SHALL BE LOW FLOW FITTINGS AS FOLLOWS:
   A. WATER CLOSETS----------1.6 GAL/FLUSH MAX.
   B. SHOWER HEADS----------2.75 GPM MAX.
   C. LAV AND SINKS----------3.0 GPM MAX.
7. DISHWASHERS SHALL HAVE AIR GAP.
8. LEFT FITTING AT ALL FAUCETS SHALL BE HOT WATER FITTING.

ELECTRICAL:
1. ELECTRIC SMOKE DETECTORS SHALL BE LOCATED ON CEILING OR WALL WITH IN 12" OF CEILING WIRED TOGETHER AND NOT CLOSER THEN 3' TO A DUCT OPENING.
2. SMOKE DETECTORS SHALL RECEIVE THEIR PRIMARY POWER FROM THE BUILDING WIRING W/O DISCONNECT OTHER THAN CIRCUIT PROTECTION WITH BATTERY BACK UP AS PER IRC R317
3. PROVIDE A GROUNDING CONDUCTOR MIM 20' OR #4 SIZE OR LARGER BARE COPPER WIRE EMBEDDED IIN CONCRETE FOOTING.
4. PROVIDE A BONDING CONDUCTOR MIM OF 1-#4 COPPER WIRE CONNECTED TO THE BUILDING WATER PIPING SYSTEM TO THE SERVICE EQUIPMENT ENCLOSURE GROUNDING BUSS.

STRUCTUAL SAWN LUMBER:

A. JOIST, BEAMS, AND LEDGERS: MUST BE DOUG FIR, #2 OR BETTER.
B. PLATES AND BLOCKING " HEM FIR STUD GRADE OR BETTER.

E. COLUMN AND POST #2 DOUG. FIR, OR BETTER.

GLU LAM BEAMS:
A. WEST COAST DOUTH fb=2400 PSI, E=1.6X10-6 PSI
B. FABRICATIONS AND HANDLING SHALL COMPLY WITH LATEST AITC STANDARDS EACH BEAM SHALL BEAR AITC STAMP INDICATING SPECIES AND STRESS GRADE.
C. FABRICATE WITH WATER RESISTANT GLUE FOR EXPOSED CONDITIONS.

ROOF SHEATHING:
A. 1/2" OSB WITH 8D AT 6" O.C. AT SUPPORTED EDGES (UNBLOCKED) AND 12" IN THE FIELD. OR (1-1/2"X13GA. STAPLES ICBO 3540) CAN BE USED IN LIEU OF NAILS.
C. STUDS: HEM FIR STUD GRADE AT INT WALLS AND #2 HEM FIR AT EXT.WALLS.

WALL SHEATHING:
A. 3/8" OSB WITH 8D AT 3" O.C. EDGES AND 12" IN THE FIELD. OR (1-1/2"X13GA. STAPLES ICBO 3540) CAN BE USED IN LIEU OF NAILS.

WOOD TRUSSES:
A. DESIGN, FABRICATE, TRANSPORT, AND ERECT PER LATEST AITC STANDARDS AND MANUFACTURER RECOMMENDATIONS.
B. FOR SLOPED TRUSSES DESIGN AT 24 PSF DEAD LOAD AND 16 LIVE LOAD DESIGN DEAD LOAD INCLUDES ALLOWANCE FOR TRUSS DEAD LOAD.
C. SUBMIT DESIGN CALCULATIONS AND SHOP DRAWING.
D. TRUSSES SHALL COMFORM TO 2012 IRC SCECIFICATIONS

GLASS:
A. GLAZING IN LOCATIONS SUBJECT TO HUMAN IMPACT SHALL BE IMPACT RESISTANT AS DEFINED IN SECTION 2406
   1. ALL GLASS DOORS, INCLUDING DOORS WITH GLASS.
   2. SIDE LIGHTS AND WINDOWS ADJACENT TO DOORS.
   3. GLAZING ADJACENT TO A WALKING SURFACE LESS THE 18" ABOVE.
   4. SHOWER DOORS AND TUB ENCLOSURES.
   5. GLAZING IN BATHROOMS WITH THE LOWER EDGE LESS THAN 56"F.F.F.
   6. MIRRORS/MIRROR DOORS UNLESS ATTACHED DIRECTLY TO WALL FRAMED OR REINFORCED.
   7. GLAZING WITHIN 24" OF DOOR OPENINGS IRC R308.4

GENERAL NOTES

NAME JOSEFA ENRIQUES
ADDRESS 1114 N. SHULTZ STREET

DRAWN BY LJW/BAT

DATE 10/12/2015

NOT TO SCALE

N

PAGE G2

MIN. SETBACKS = R2
FY = 20'
SY = 5'/10'
RY = 15'

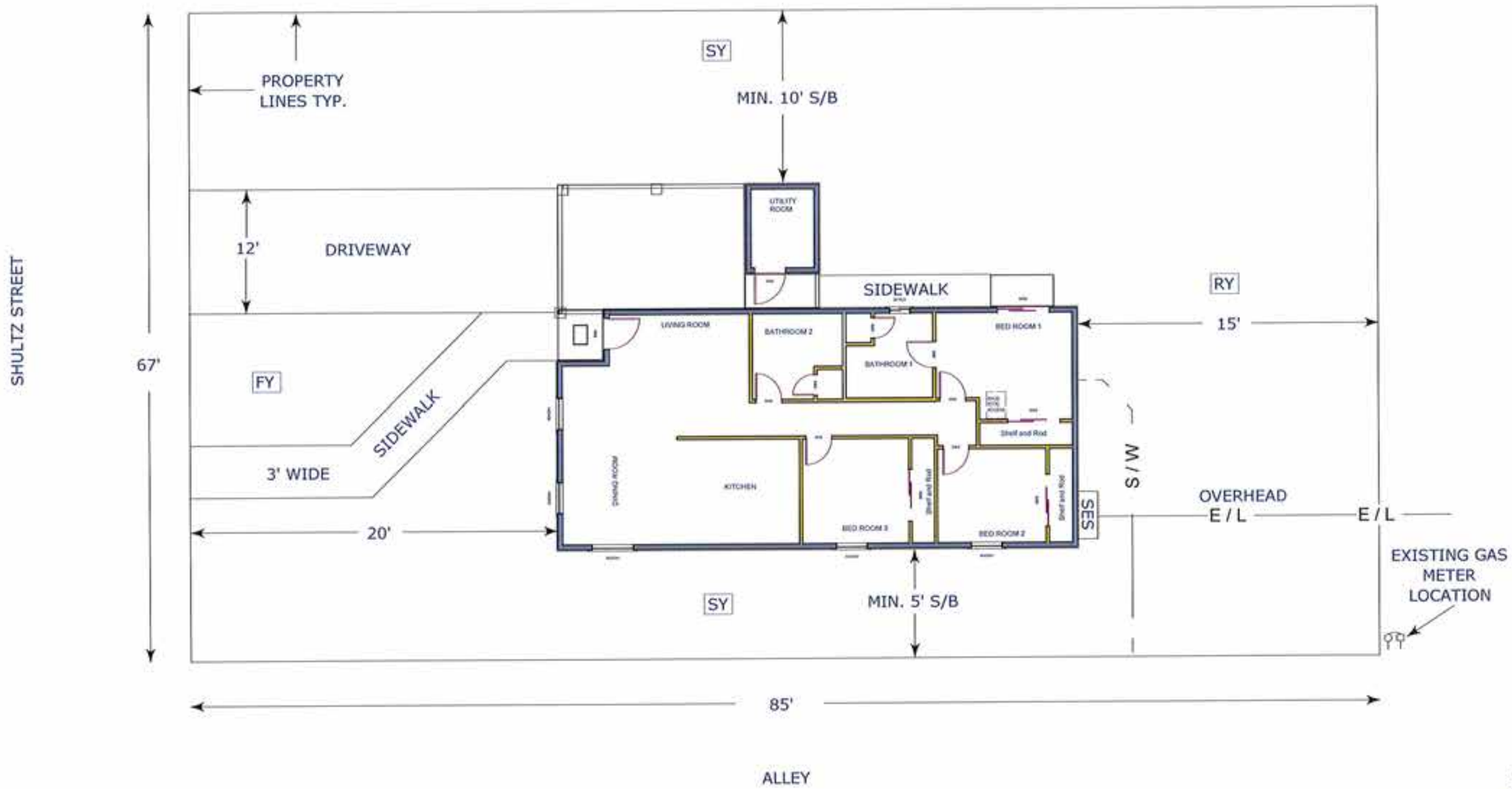

NOT TO SCALE

N

PLOT PLAN

NAME JOSEFA ENRIQUES
ADDRESS 1114 N. SHULTZ STREET

DRAWN BY LJW/BAT

DATE 10/12/2015

PAGE P1